HORIZON POWER

energy for life

Switching Operator's Manual (Rev 1)

Transmission Switching

Document Number: 5010609

Document Control		
Document Owner *(May also be the Process Owner)*	**Name:** Stuart Smit **Position:** System Operations and Switching Coordinator	
Approved By	**Name:** Mick Veverka **Position:** System Operations Manager	
Date Created/Last Updated	July 2020	
Review Frequency	Two yearly	
Next Review Date	July 2022	

STAKEHOLDERS The following positions must be consulted if an update or review is required:	***NOTIFICATION LIST*** The following positions must be notified of any authorised change:
Manager System Operations	Works Delivery Managers
	Field Practise Co-Ordinators

HORIZON POWER
energy for life

RECORD OF REVISIONS

Revision No.	Date	Revised By	Description
1	July 2020	Stuart Smit	Planned review

SECTION TWELVE

Introduction: Transmission Switching

Table of Contents

List of Figures

No table of figures entries found.

List of Tables

No table of figures entries found.

12. Introduction: Transmission Switching

12.1 Purpose

Manual Two provides the switching operator with information on the transmission network configuration, apparatus and switching operations. This manual covers the transmission network associated with the Pilbara Grid. It should be noted that this Manual must be used in conjunction with Manual One Sections 8 and 9, as these sections are applicable to both transmission and distribution switching.

Manual One provides the switching operator with information on the distribution network configuration, apparatus and switching operations. The manual covers the distribution network associated with microgrid and Pilbara Grid systems.

Both manuals are intended to be used as a resource for all switching operators and also a major resource for the training modules in Switching Operations.

12.2 Content

12.2.1 Manual Two

Manual Two covers the network apparatus and switching associated with the transmission high voltage (HV) network in the Pilbara Grid.

A brief description of the contents of each section is provided below.

Section 13

Section 13 describes in detail zone substation busbar arrangements, primary apparatus such as earth switches, circuit breakers, transformers, capacitor banks and protection equipment. Also included are the switchyard numbering system and general switching procedures.

Section 14

Section 14 covers transmission lines and their operation. Switching considerations, Permit to Work procedures for lines and the requirements for working with other operating authorities are also included.

Section 15

Section 15 describes in detail terminal substation busbar configurations, circuit breakers, transformers, protection equipment, switching procedures and remote control of apparatus.

Section 16

Section 16 provides details of the protection systems used within the Transmission network for the detection of faults on network apparatus and transmission lines. Protection zones and the types and arrangements of protection are examined.

Section 17

Section 17 should be read in conjunction with Manual One, Section 9. The basic principles of program writing are elaborated upon for programs involving the transmission network. Examples of switching programs are included.

Section 18

Section 18 discusses the testing and commissioning of transmission substations and associated apparatus. A typical protection commissioning schedule and associated Horizon Power commissioning switching program is included.

Manual One Section 8 – Switching for Safety

Manual One Section 8 is also applicable to transmission switching and must be included in a transmission switching training program.

12.3 Switching Operator Authorisation Levels

Horizon Power's Switching Operator Authorisation Levels are described in the table below.

Level	Description
1	Fault response – initial response to faults including switching to disconnect faulted apparatus on de-energised distribution systems.
2	Distribution switching – all primary apparatus associated with HV and LV overhead and underground networks.
3	Substation switching – allows switching operations on primary apparatus located within Pilbara Grid and microgrid substations.
4	Transmission switching – all primary apparatus associated with Transmission lines, zone substations and terminal stations.
5	Protection and other secondary systems – isolation and commissioning of protection and secondary systems.
6	Generation switching – HV and LV switching on generation sites.
7	HPCC controller switching – switching coordination and remote switching of Pilbara Grid and microgrid apparatus.

Field Instruction – *Switching Authorisation* details the requirements of obtaining a switching operator’s authority.

SECTION THIRTEEN

Zone Substations

Table of Contents

List of Figures

List of Tables

13. Zone Substations

13.1 Introduction

This section deals with the operations of zone substations. It covers all aspects of zone substation switching excluding that associated with distribution feeders and transmission lines. Distribution feeder switching, UFLS, transformer tap adjustment for feeder interconnection etc. are covered in Manual One, Section 6 - Zone Substations. Transmission line switching is covered in Section 14 of this Manual.

13.2 Substation Busbar Arrangements

Substation busbars are generally grouped into two areas, primary and secondary.

The primary busbars refer to the busbars that connect the incoming transmission lines to the transformers. The secondary busbars refer to the busbars that connect the transformers to the outgoing distribution feeder circuits. (See Figure 13-1). The secondary busbar arrangements have been described in detail in Manual One, Section 6.

There are two general types of primary busbar arrangements for zone substations:

- single bus, and
- double bus.

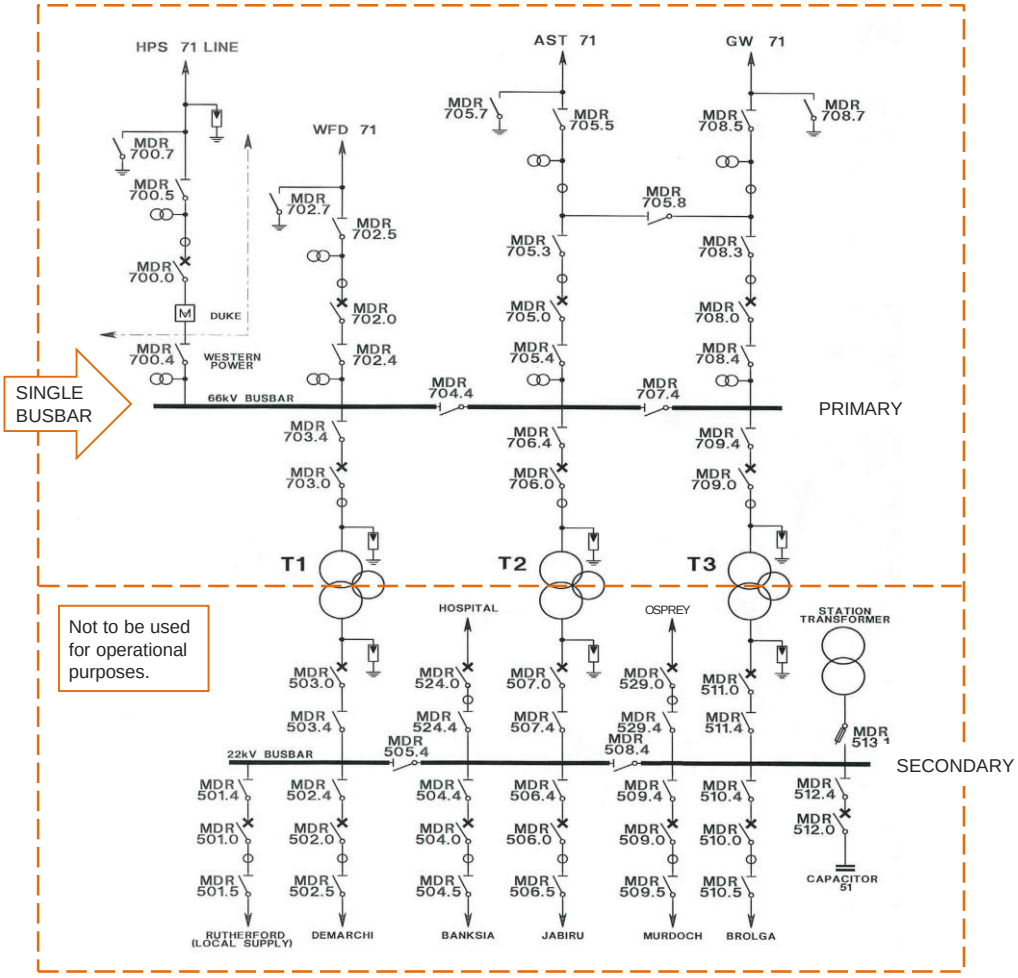

Figure 13-1 Single primary and secondary busbars

13.2.1 Single Busbar

Many Horizon Power zone substations are single busbar as shown in Figure 13-1. In this arrangement the incoming lines connect to the busbar via disconnectors and circuit breakers. Many zone substations only have two lines which are part of a transmission ring. This arrangement is simple but lacks flexibility. The loss of a section of the busbar or transmission line results in a loss of supply security because:

- the transmission ring is open at that point and must remain open until the busbar or line is restored
- if a transformer is connected to the damaged section of busbar the transformer will be lost for the repair time of the fault.

13.2.2 Double Busbar

A more secure zone substation is the double busbar arrangement as shown in Figure 13-2. This arrangement provides greater flexibility in that each line or transformer can be selected to the ‘A’ or ‘B’ busbar via disconnectors. Full security can be maintained for the loss of a busbar by selecting all circuits to the remaining busbar.

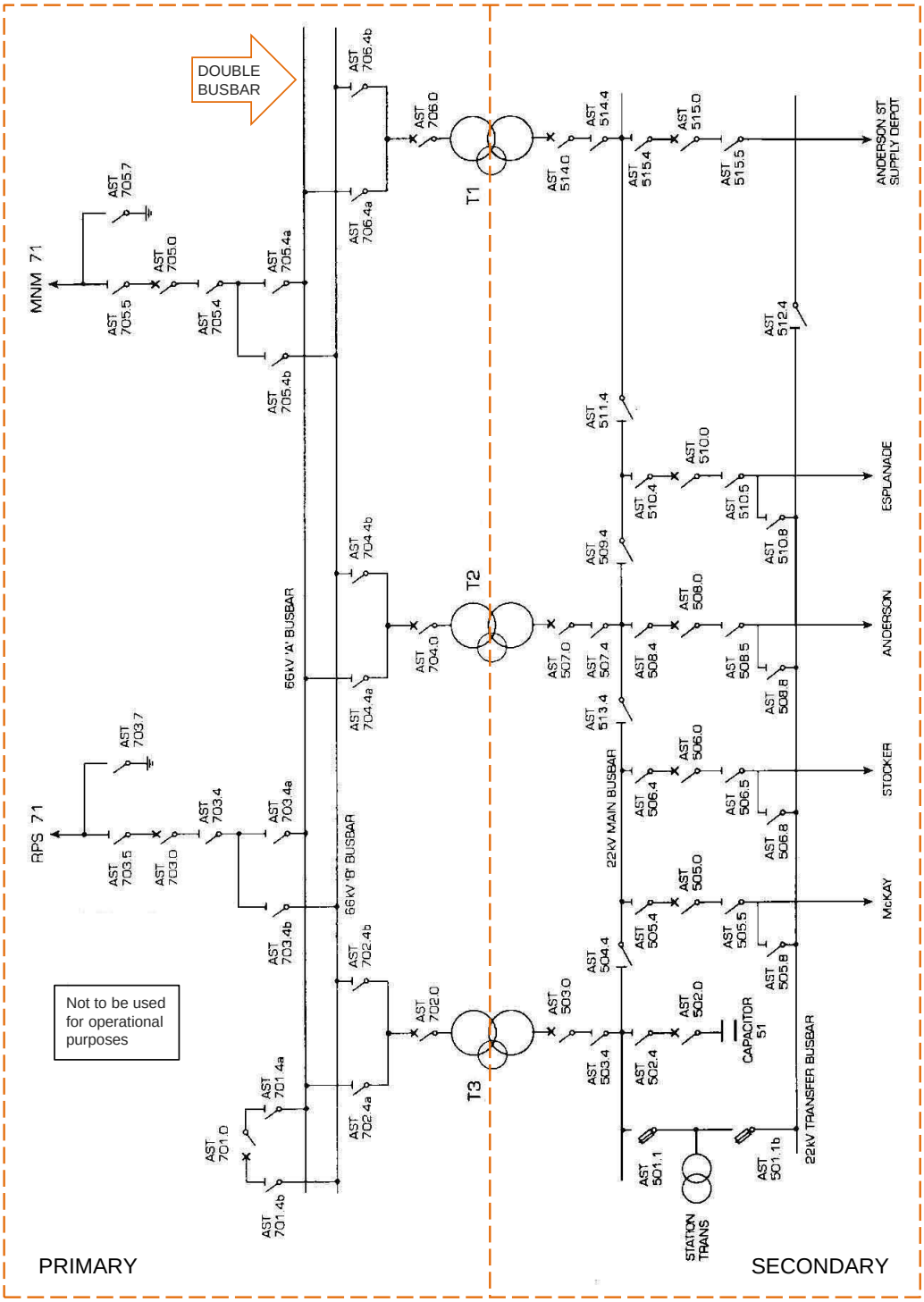

Figure 13-2 Double primary busbar arrangement

13.3 Switch Numbering

The numbering system used in zone substation has been designed to indicate:

- the substation where the switch is located
- the operating voltage of the switch
- the circuit number (two digits)
- the type of equipment being operated.

For full details see Section 15.4 (Plant Designation) of this Manual.

Substation Abbreviation	Voltage	Circuit number (two digits)	•	Apparatus type
MDR	7	02	•	4
AST	7	03	•	4a

Table 13-1 Examples of switch numbering in Horizon Power zone substations

Figure 13-3 below shows an example for circuit numbering used in MDR.

Note that the circuit numbering is usually ordered from left to right. In general, the circuit numbering is consecutive. However exceptions do occur, perhaps due to past modifications or allowances for future additions. For example, in Figure 13-3, Circuit 01 is not present.

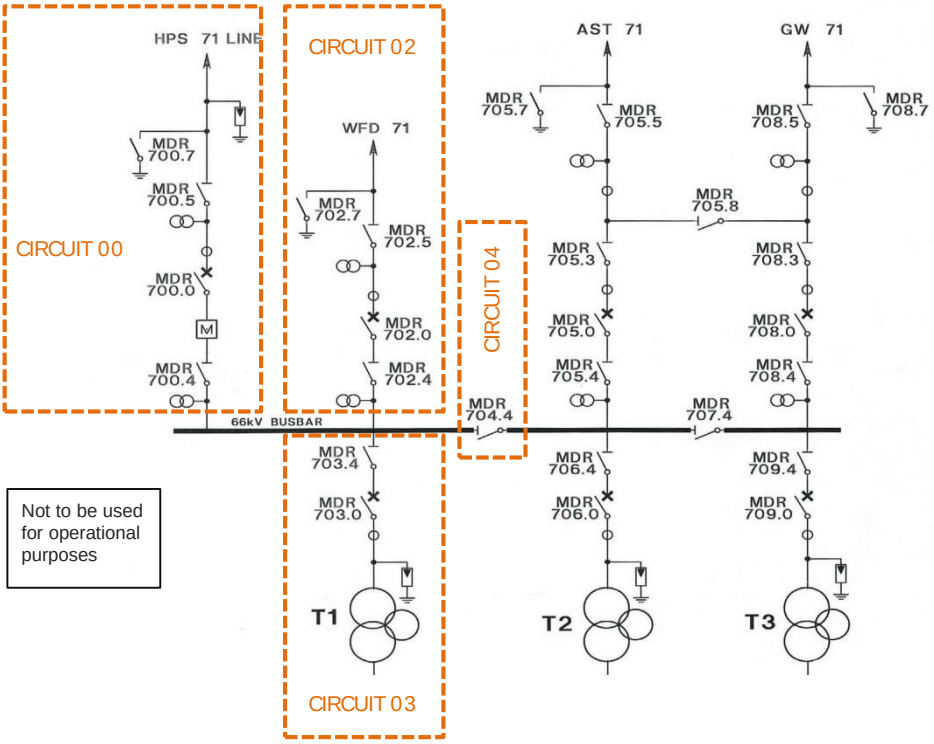

Figure 13-3 Example circuit numbering used in typical zone substation. Note Circuit 01 is not present in this example, perhaps due to past modifications or allowances for future additions.

13.4 Earth Switches

Fixed earth switches are fully rated for the system earth fault current. Operationally they must be used as preferred program earths wherever they are installed.

Note Testing for de-energisation of the line must be carried out, using an approved test instrument before the earth switch is closed.

Most zone substations have fixed earth switches installed in conjunction with the line disconnector (isolator) as shown in Figure 13-4.

Where earth switches are fitted they are installed on the line side of the line disconnector. Interlocks are often fitted to an earth switch to prevent a range of

unsafe switching operations. A more detailed description of interlocks is provided in Section 13.5.

Earth switches are not normally installed on bus disconnectors or transformer disconnectors in zone substations.

Note Earth switches are often mounted on the same structure as a line disconnector with the operating handles on opposite sides of the structure. Care must be taken in checking the switch identification to ensure the correct device is being operated, that is, the earth switch apparatus type is 'xxx.7' and line disconnector apparatus type is 'xxx.5'.

13.5 Interlocks

Interlocks are commonly used in zone substations to limit the operation of switching apparatus. Interlocks are generally used on earth switches and disconnectors.
It is not normal to find any interlocks within a 66kV zone substation.

Note Interlocks are not always fitted, so it is still possible to close some earth switches onto a live line with the disconnector closed.

These interlocks are mechanical and use a mechanical barrier between the operating linkages of the disconnector and earth switch. It is designed so the earth switch can only be closed when the disconnector is open and the disconnector can only be closed when the earth switch is open.

Note All interlocks are simply a back-up device and these may fail. The switching operator should not solely rely on them. Remember to check switch identification and test for de-energised before closing the earth switch.

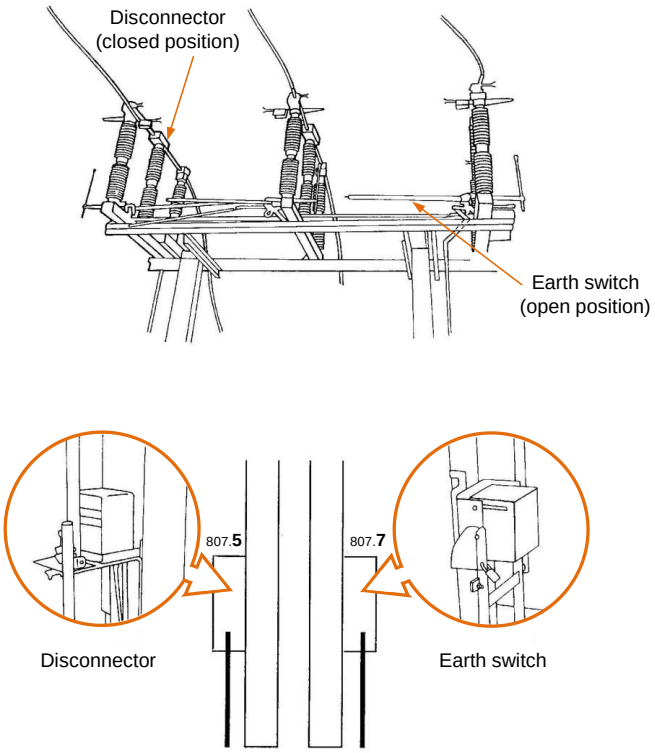

Figure 13-4 Earth switch/disconnector combination

13.6 Circuit Breakers

Circuit breakers used in some substations for transmission switching have the same basic construction types as those used for distribution switching. (See Manual One, Section 6). They are the main items of switchgear used to make or break load and fault current.

13.6.1 Operation

Circuit breaker operation can be performed from a number of locations as listed below:

- HPCC via SCADA
- a relay panel for outdoor circuit breakers
- the front control panel for an indoor switchboard
- an human machine interface (HMI) if installed in a microgrid substation, and
- an outdoor circuit breaker mechanism box.

Control from HPCC is the main method of operation. However in the event of a SCADA or control circuit failure, the switching operator must be aware of how and when to switch circuit breakers from alternative locations.

13.6.2 HPCC Operation

HPCC SCADA provides overall visibility of the network conditions and wherever possible a transmission circuit breaker should be operated from HPCC.

Remote switching of electrical apparatus by HPCC improves switching operator safety because the switching operator is not in the vicinity of apparatus when operated. Also, in the case of emergencies, HPCC can provide immediate response via the remote operation of apparatus.

Operations on transmission circuit breakers must only be carried out as part of an authorised switching program unless otherwise authorised by HPCC. During fault switching, it is normal practice for the switching operator in the field and the HPCC controller to write an emergency program together before switching.

HPCC coordinates switching program execution and will perform HPCC switching steps and request the field switching operator to complete specific switching steps and then report back.

13.6.3 Relay and control panel switching

For outdoor circuit breakers the controls are frequently on the circuit breakers relay panel located inside the relay room. This provides an alternate remote location switching for circuit breakers.

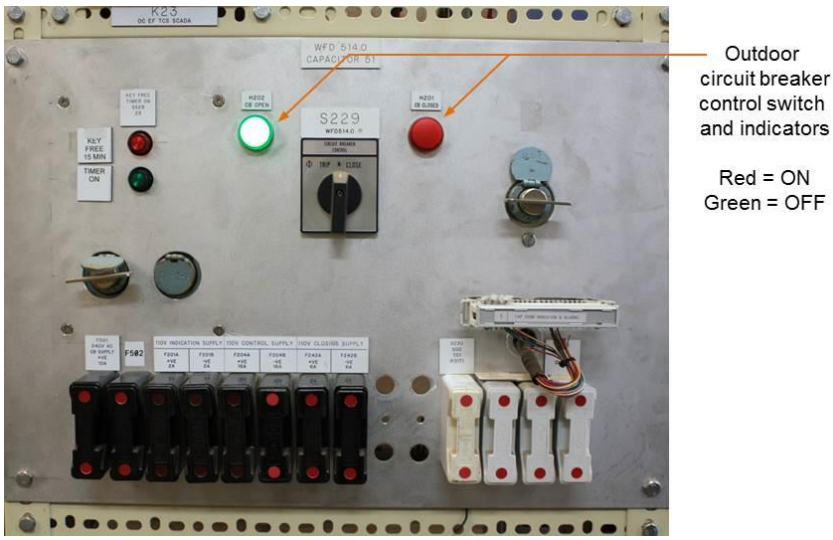

Figure 13-5 Outdoor CB control switch and indicators

13.6.4 Indoor switchboard switching

For indoor circuit breaker the controls are frequently located on the front panel of the circuit breaker cubicle. As this location is in the immediate vicinity of the circuit breaker to be operated remote switching is preferred. The circuit breaker is usually switched by HPCC.

The control panel provides circuit breaker on/off indication and a control switch to locally open and close the circuit breaker. The switching operator is required to manually rack the circuit breaker between the service and isolated positions.

Circuit energisation status indicator are usually provided to show the present energisation state of the cable. The switching operator must confirm the indicator is working when energised and the indicator shows the de-energised state before closing the circuit earth switch.

Interlocks ensure the circuit breaker must be racked out before the earth switch can be closed.

Figure 13-6 Indoor CB control switch and indicators

13.6.5 Human Machine Interface (Remote) (HMI)

Some substations may have a local screen-based HMI (human-machine interface) installed. Operations may be carried out from these panels when authority has been given by HPCC.

13.6.6 Local Operation of Outdoor Circuit Breaker

Local operation of the circuit breaker from the mechanism box is intended for maintenance purposes and should not be used when the circuit breaker is energised.

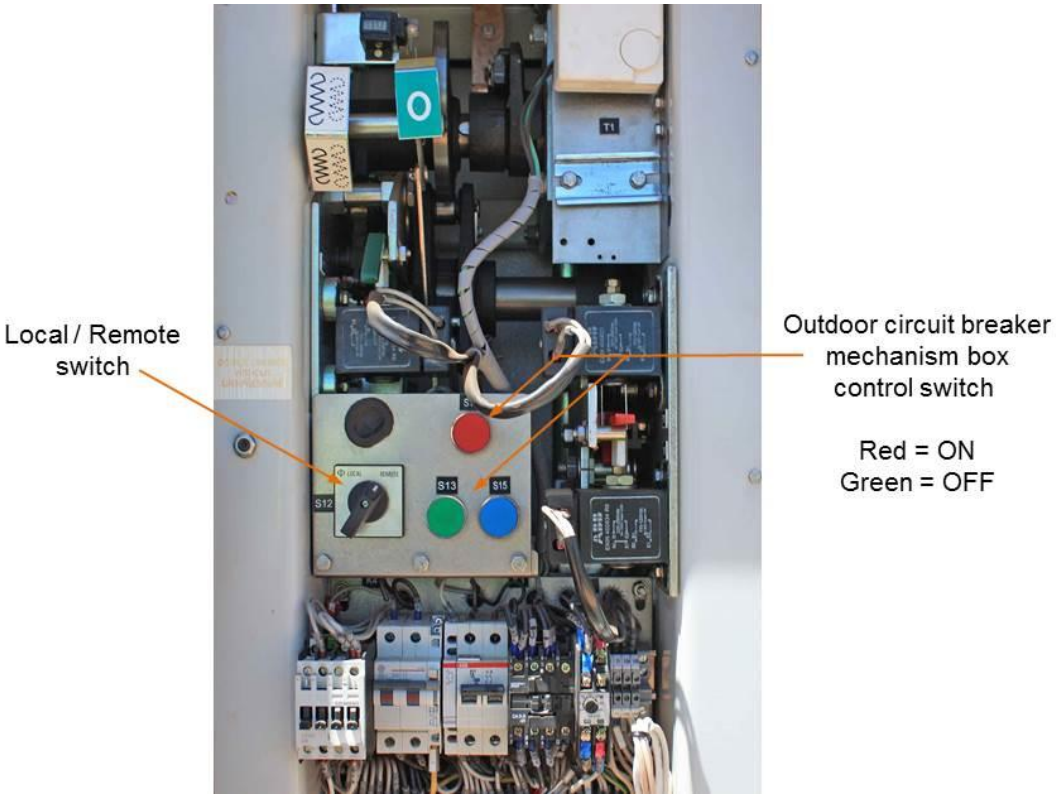

Figure 13-7 Outdoor circuit breaker mechanism box control panel

Some of the different mechanical box control functions are described in Manual One, Section 6. However the number of types of circuit breaker make it difficult to be specific. On all types, operators should take time to investigate fully the circuit breakers which they are likely to switch in substations.

Things to keep in mind are:

- location of gas pressure or oil level indication

- location of local/remote switch
- location of trip/close switch
- location of circuit breaker control fuses, and
- method of manual charging (for example, winding of spring).

Note Where control panels with local/supervisory switches are installed in zone substations, these must be left in the supervisory position. They must only be put into local position when carried out as part of a switching program or otherwise approved by HPCC.

Note Local operation to open or close an energised circuit breaker should be avoided because of the inherent danger of circuit breaker failure.

Note The Switchgear Instruction Manual (SIM) provides details for local operation of *some* circuit breakers.

13.6.7 Recharging

As mentioned earlier, transmission circuit breakers used by Horizon Power are of the trip-close-trip type. This means that there should always be a spare close-trip function available if the circuit breaker trips and no mains supply is available to recharge the spring.

However, like all mechanical devices they are prone to faults and switching operators may find themselves in the situation where there will be no close-trip function stored in the circuit breaker. When this happens it is necessary to recharge the close-trip function manually.

Each type of circuit breaker has a unique method of recharging. Some circuit breakers use manual crank handles while others have hydraulic rams which have to be pressurised by pumping a lever. Switching operators must become familiar

with each type within their work area as this may be the last resort for energising a tripped circuit.

Note As this operation needs only to be carried out if the last close-trip function is used and there is no station transformer supply available, switching operators may find it easier to restore the station supply to automatically recharge the springs. One option may be to backfeed via a distribution feeder from another substation to energise a busbar and a local supply at the black substation.

(See Manual One, Section 6.6.1 – AC Local Supplies).

Note If manual recharging is necessary while control circuits are energised, the operator should remove the circuit breaker control fuses before charging. This prevents the motor from engaging while the crank handle is being used.

Remember to replace the control fuses when charging is completed. On most circuit breakers with spring operation there is an isolating switch for the control supply installed in the manual cranking mechanism.

Note The Switchgear Instruction Manual (SIM) provides details for charging circuit breaker mechanisms for some circuit breakers.

13.7 Transformers

Zone substation transformers differ in voltage ratings and capacities. They are used to step down from transmission voltages (132kV or 66kV) to distribution voltages (33kV, 22kV, or 11kV). They are the most expensive piece of apparatus in a zone substation and therefore have appropriate protection equipment installed to guard against faults.

Switching operators must not energise any zone substation transformer that has tripped off on fault.

When confronted with this situation the operators must:

- contact HPCC
- check all associated relay panels and log protection flags
- visually inspect the transformer, and
- inform HPCC of exact details of the fault.

From the above information and following consultation with the relevant Asset Manager, a decision can be made whether or not to re-energise the transformer. Further investigations may be required.

Together with the usual type of protection relays (i.e. overcurrent, earth fault) used elsewhere on the system, transformers have additional protection.

These include alarms and trips that guard against:

- low oil level
- gas build up and oil surge (Buchholz)
- overheating (oil, windings).
- transformer differential
- restricted earth fault.

Note Unless approval is given by the relevant Asset Manager to HPCC, a switching operator must never attempt to put a zone substation transformer which has tripped on protection back into service, because of the risk that energising the transformer could do further damage.

13.7.1 Low Oil Level Alarm

Some zone substation transformers have an inbuilt alarm on the conservator tank level gauge (see Figure 13-8.) If the oil level falls below a preset level an alarm will be triggered. These alarms are usually relayed to HPCC.

Two types of oil level indicators are shown on Figure 13-8.

The Type 1 oil level indicator shows the expected oil level at different oil temperatures. The conservator oil level is correct when the conservator gauge temperature is the same as the temperature reading shown on the transformer oil temperature gauge.

Type 2 is simply an oil level gauge.

If no low oil alarm is available on the conservator, a Buchholz gas alarm will also indicate if the oil level is low. This is due to the float arrangement inside the transformer Buchholz relay activating either for a build-up of gas from inside the transformer, or from the oil level reduction in the relay housing.

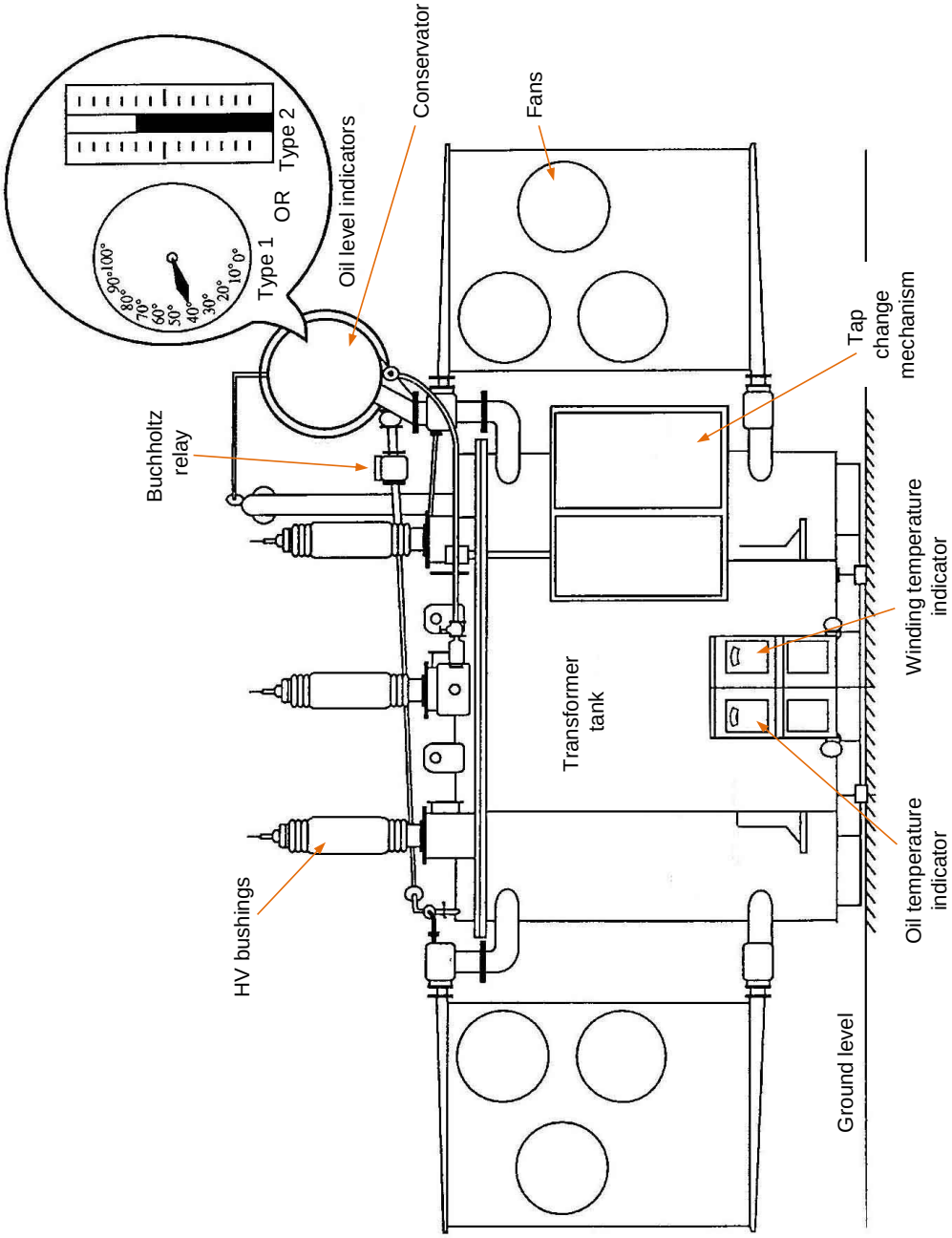

Figure 13-8 Transformer oil level gauge

If flagging indicates a low oil level, investigations must be carried out to find if the problem is sufficient to warrant de-energisation of the transformer until the oil level can be increased. If the flags indicate 'Buchholz gas alarm' the transformer must be taken out of service as soon as possible and investigations made to find if the cause of the alarm was minimum oil level or gas build up from inside the tank.

Gas build up is an indication that some form of overheating or arcing has occurred in the transformer windings due to a fault or maybe due to air trapped in the relay as a result of inadequate bleeding from a previous inspection. Gas in the Buchholz relay should always be removed for analysis.

13.7.2 Buchholz Trip

The most important function of the Buchholz is to trip the transformer when:

- an internal fault causes a surge of gas or oil from inside the transformer, or
- the main oil level of the transformer drops below the Buchholz relay.

These points are important because the quicker these faults can be removed, the least amount of damage will result inside the transformer.

Detailed investigation must be carried out to find the exact cause of a Buchholz trip. The transformer must not be put back into service until the exact corrective measures have been taken.

For any Buchholz trip alarm, the appropriate technical staff must be brought in to take samples of gas or oil via the Buchholz bleeder valves for chemical analysis. This analysis gives positive indication on the exact type of fault and its extent. Decisions can then be made about the transformers future.

Note Some transformers have an additional Buchholz pressure-activated relay fitted for the tap changer tank.

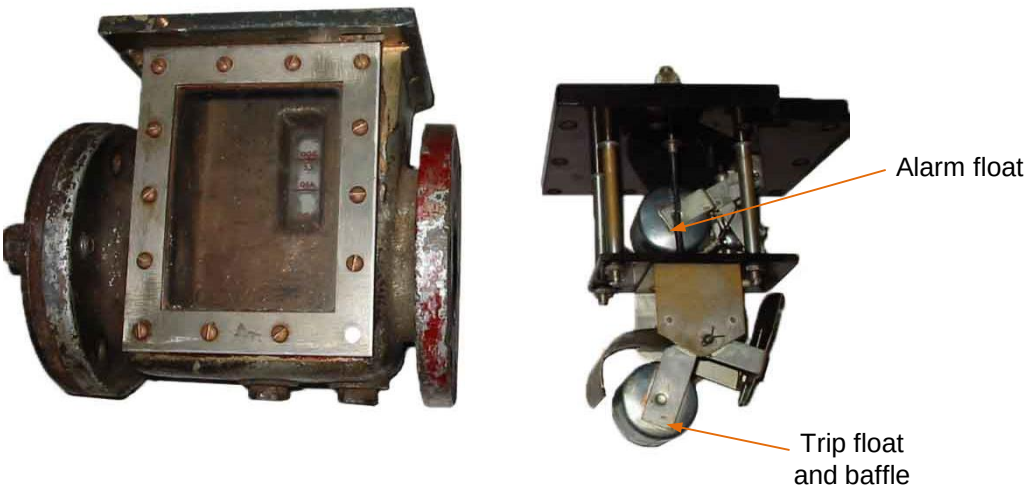

Figure 13-9 Buchholz relay

13.7.3 Winding Temperature

The winding temperature indicator is to:

- start auxiliary cooling fans and/or oil pumps
- activate an over-temperature alarm, and
- initiate a trip of the transformer circuit breakers if the temperature continues to rise

Switching operators should be aware that regular inspection should be carried out to make sure all auxiliary cooling fans or pumps are in working order.

If these items become defective the transformer cannot be run to its full capacity. That is a 20/27MVA transformer will run at 20MVA without any cooling equipment, but at 27MVA with all cooling equipment running.

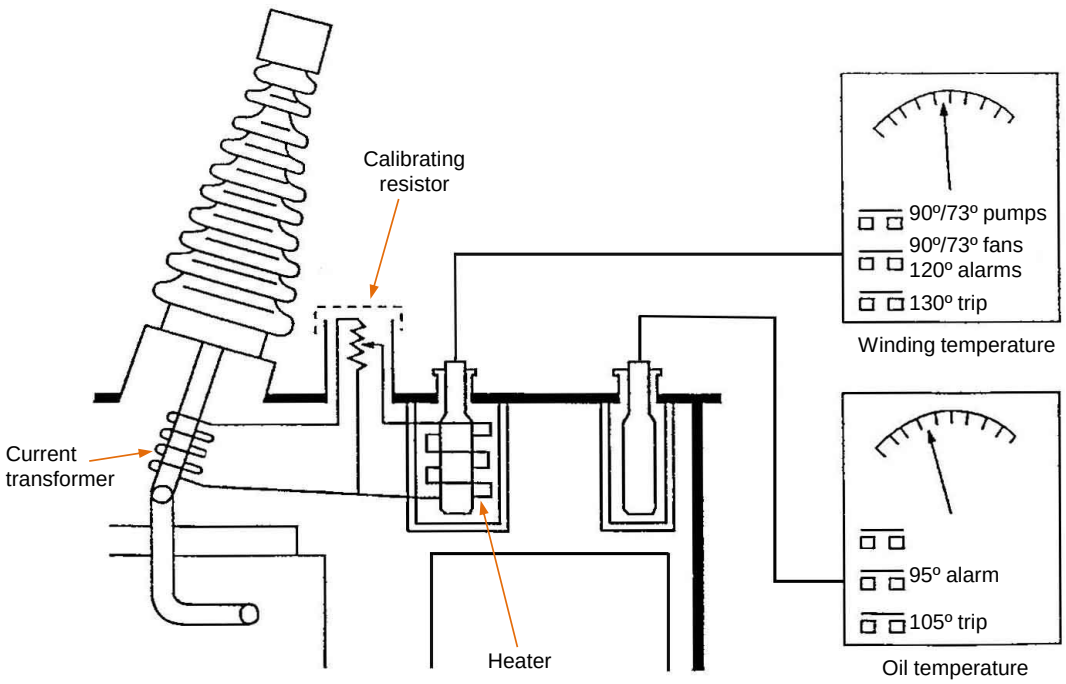

Figure 13-10 Transformer temperature control

If a winding temperature alarm is activated it is normally due to either:

- an overload of the transformer causing heat increase, or
- malfunction of cooling equipment causing a heat increase in the transformer.

Operation of the winding temperature alarm must be treated seriously and immediate attention given to rectifying the problem. Inspection of the transformer and its loading will dictate what action needs to be taken.

The winding temperature circuit is connected so that extra cooling facilities (fans/pumps) are activated before the alarm/trip function. (See Figure 13-10.)

Note The temperature values as shown in Figure 13-10 are typical values and may vary on different transformers.

Note Care should be taken when testing cooling fans and pumps to ensure that the control circuits are restored to normal operation after testing is complete.

13.7.4 Oil Temperature

This protection has two main purposes:

- to initiate an oil over-temperature alarm, and
- to initiate oil over-temperature tripping of the transformer circuit breakers.

The alarm and trip settings on this protection are set lower than the winding temperature gauge. This is due to the fact that the heat generated by the windings is dissipated through the cooling medium (oil) and so the alarm setting on the oil gauge (95°) roughly corresponds to the alarm setting on the winding gauge (120°) (see Figure 13-10).

Oil and winding protection can be used singularly or both together, they are used for the same purpose. One acts as a backup for the other, ensuring efficient protection of the transformer. Where a transformer is not fitted with pumps and fans, usually only an oil temperature alarm is fitted.

As mentioned previously, an alarm or trip on either oil or winding temperature protection, must be viewed seriously.

The response to a transformer winding or oil temperature alarm is to check the transformer load and confirm all cooling is functional. Relocating load may be considered as a solution or a decision to temporarily shut the transformer down may be made. This would allow time for the transformer to cool and for further tests if necessary.

Where a transformer trips on winding or oil temperature the transformer should not be re-energised until approval is given by the relevant Asset Manager to HPCC.

13.7.5 Earthing Compensators

An earthing compensator transformer is used on power transformers with a delta secondary supplying feeders or a delta tertiary winding which supplies reactors or station supply transformers (See Figure 13-11 below).

The earthing compensator provides an earth reference on the delta winding, facilitating the detection of earth faults on connected apparatus.

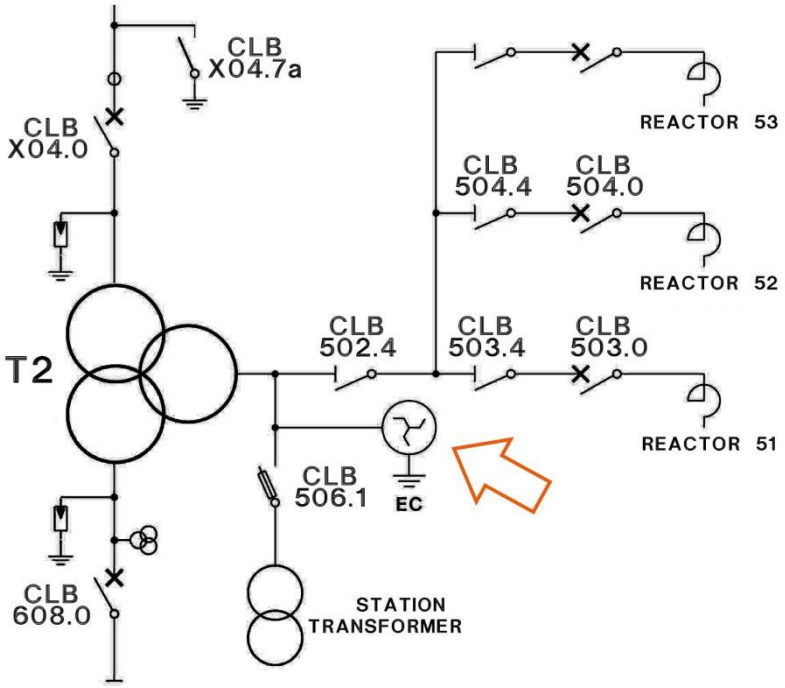

Figure 13-11 Earthing compensator

Earthing compensator transformers are used:

- to allow a return path for earth currents in the event of faults on the circuits connected to the winding
- to reduce fault current level
- to allow measurement of earth currents for various types of transformer protection, and
- to limit the rise in voltage on the sound phases in the event of a fault.

The earthing compensator transformer is an integral part of the operation of the main transformer. If it becomes defective or for some reason malfunctions, the main transformer must also be taken out of service.

13.7.6 Over-Excitation of Transformers

Transformers are designed for operation over a range of voltages which ensure that the core is not over excited. Over-excitation of the core, due to operation at higher than design voltages, causes magnetic saturation of the core leading to overheating and possible damage to the core. Transformers should always be operated within the normal design range of voltages.

13.8 General Switching

It is not the intention of this manual to document instructions and procedures for every situation that the operator may face, but this section will highlight general procedures and problems which may arise when switching in zone substations.

13.8.1 Switching Sequence

As with all switching, the general rule for substations is:

- when de-energising transformers – switch secondary voltage first then primary voltage last
- when energising transformers – switch primary voltage first then secondary voltage last.

13.8.2 Transformer Changeover

Regular rotation of transformers in substations where not all transformers are being used continually has some advantages:

- equal efficient use of substation transformers thus extending their lives
- allows operation staff to regularly monitor transformers and so keep potential problems to a minimum
- operational staff can be confident that if the extra transformer is required, it will be in good working order.

(For parallelling transformers procedures see Manual One, Section 6.10).

The procedure for changing a transformer over is detailed below.
Refer to Figure 13-12 while reading the steps.

Note It is normal for the transformer changeover to be performed from HPCC.

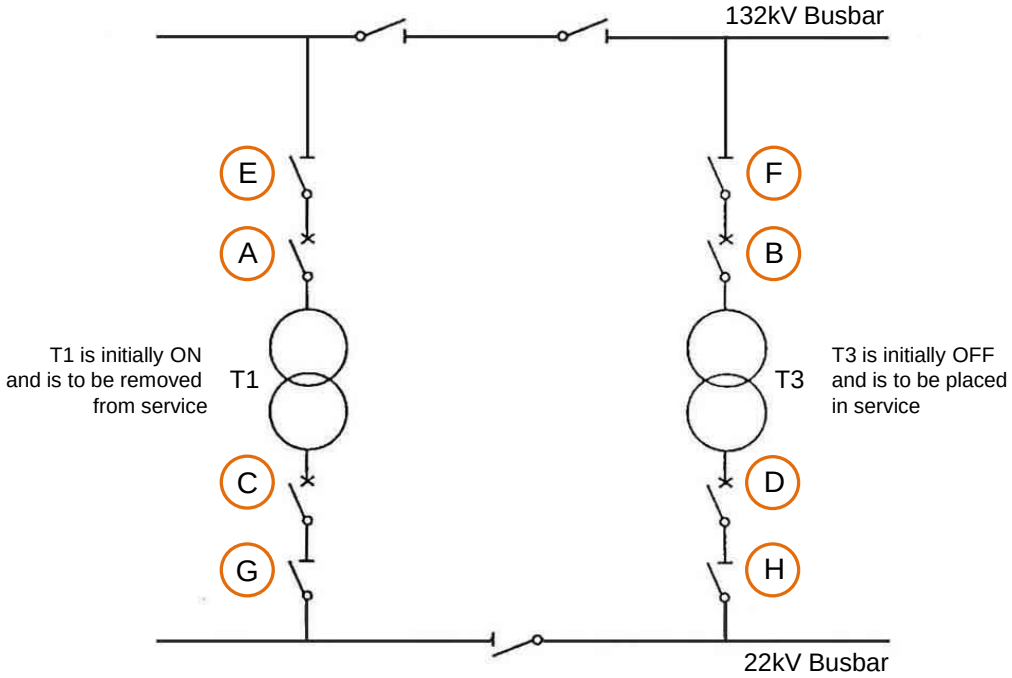

Figure 13-12 Transformer changeover

A transformer may require changing over because of operational requirements or as part of a switching program to access the network. The steps to change over a transformer are as follows:

1. Confirm T3 primary disconnector (F) and secondary disconnector (H) are closed. These are normally left closed if the transformer is available for service.

2. Energise T3 by closing T3 HV circuit breaker (B).

3. Place T1 tap changer in manual and check T3 tap changer in manual.

4. Adjust T3 (and T1 if necessary) tap changers in preparation for parallelling. Typically the newly energised transformer T3 will have taps manually set to match that of loaded transformer T1.

Note See Manual One, Section 6 for procedures for different transformers sizes.

---

5. T3 circuit breaker (D) is closed. This parallels the two transformers – check the load is shared between T1 and T3.

6. T1 circuit breaker (C) is opened. Confirm all load is transferred to T3.

7. T1 circuit breaker (A) is opened, de-energising T1.

8. Set T3 transformer tap changer set to auto to regulate the output voltage. T1 the de-energised transformer remains in manual.

13.8.3 Zone Substations Liquid Fuses/HRC Fuses

High voltage liquid fuses or HRC fuses are commonly used to protect station transformers and power transformer secondary side voltage transformers (see Figure 13-13).

Figure 13-13 Liquid filled fuses on a voltage transformer

Access for Removal and Replacement

Access for removal and replacement of high voltage liquid and HRC fuses requires isolation, earthing and issue of an EAP of the Zone substation transformer is required to access the fuses

Often liquid fuse cartridges either have their end cap blown off or the glass casing breaks as a result of the fuse blowing. Care must be taken when removing broken fuses from their holders as injury can result.

Switching operators may have to closely inspect an existing liquid fuse or test it to ascertain if it is blown. This is because the glass tube often becomes extremely dark so that the fuse element is not clearly seen. When liquid fuses become cloudy it is standard practice to replace them.

Liquid Fuses

Unlike the drop-out expulsion fuse, the liquid filled fuse does not drop away when the fuse element blows. (see Figure 13-14 below).

Figure 13-14a shows a section of a fuse element in its normal position. The spring is held in tension by the fuse wire. As it is not strong enough to take the strain of the extended spring, a strain wire is also installed.

Beneath the fuse element is a liquid director piston. When the fuse element melts, the spring pulls the two contacts apart. At the same time, the liquid (usually carbon tetrachloride) director piston forces the liquid through the hole in the piston. This is directed onto and extinguishes the arc.

Figure 13-14b shows a blown fuse. The spring settles at the bottom end of the fuse tube when it is blown.

When working with liquid fuses, the operator should remember the following:

- Appropriate personal protective equipment must be worn.
- Fuses are usually changed by hand, hence access is required.
- If the glass darkens, it may be difficult to see if the fuse has blown.
- If the liquid level is low, the glass tube may explode as the fuse blows.
- The fuse should be changed as soon as a low liquid level is observed.
- The fuse element is always mounted at the top.
- The liquid fuse level should be at a point just below the liquid director piston (see Figure 13-14).

Care must be taken when handling liquid-filled fuses to avoid breakage and contact with the liquid.

High voltage HRC fuses function in a similar manner to the HRC fuses used in ring main fuse switches.

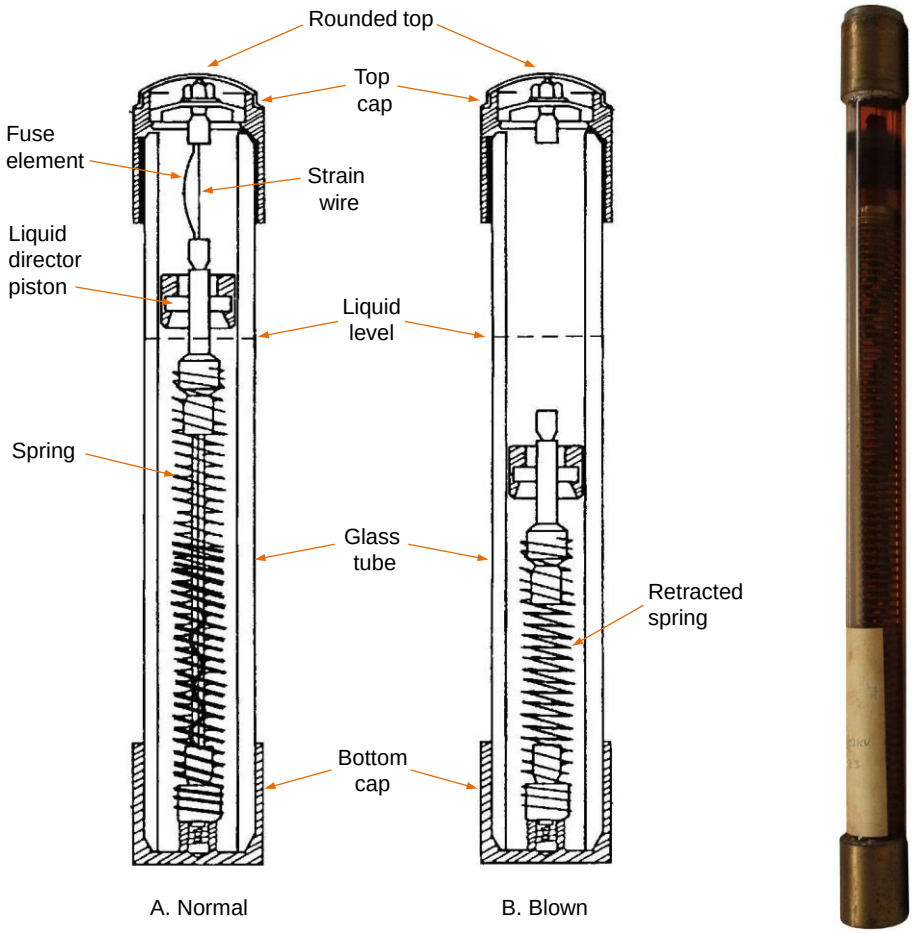

Figure 13-14 Liquid filled fuse section with a sample fuse on the right.

13.9 Zone Substation Faults

This section of the manual will deal with faults within a zone substation. Zone substation faults can include faults on:

- transmission busbars
- circuit breakers
- disconnectors
- transformers, and

- distribution busbars or equipment.

Within the substation, any one or a combination of the above faults, could result in loss of power to the substation local control circuits. When this occurs, it is referred to as a 'black substation'.

13.9.1 Black Substation

A 'black substation' provides HPCC and the switching operator with a host of problems. This results in the loss of 415/240V AC local supply required to operate battery chargers, transformer tap changers, cooling fans and lighting.

In this situation it is essential that the operator find the exact cause of the fault if possible, before any re-energisation is considered. If this is not done there is the possibility of energising the faulty equipment again, causing further damage.

Switching operators must:

- contact HPCC upon arrival at the substation
- check for and log all relay flags that have operated on transmission panels
- reset relays and flags
- inspect substation equipment, and
- notify HPCC of investigation details.

From the investigation details obtained, the switching operator must liaise with HPCC staff, to determine the quickest and most secure method of restoring supplies to normal. This may include isolation of faulty equipment if found to be unserviceable, or alternative feeds if available to feed the circuit affected by the outage.

An emergency switching program must be written between the switching operator, and the HPCC controller for any switching that may be required to isolate and earth to provide access.

Note HPCC must approve all switching operations.

When determining the restoration procedure of 'black substations', the operator must consider some factors which are not a part of normal switching operations.

Some of these include:

- Transmission circuit breakers have a trip-close-trip facility.
  When manually reclosing these circuit breakers, operators have only one close function available after the initial trip.

  (Trip relays must be reset before reclosing otherwise an immediate trip will occur and spring charge will be lost).

- When energising a substation, an initial inrush of power can be expected. This is due to the energising of transformers and customer loads.

  The inrush current could be 1.5 to 2 times the load of the substation before it was de-energised. To avoid inrush it may be necessary to trip distribution circuit breakers (feeders) and energise them one at a time.

- If the substation is fed via a ringed transmission system, system security requirements will determine the best way to re-energise.

- Consideration should always be given to restoring local supplies to the substation, via interconnection of the distribution system if possible.

There are other factors which may have to be considered depending on the nature of the fault, and whether the equipment in question is unserviceable.

Due to the wide range of causes for these faults, it is not possible to outline investigation and restoration procedures for every case. Following is an outline of two faults with investigation and restoration procedures included. These should only be used as basic guidelines as each fault will have its own peculiarities.

Example 1

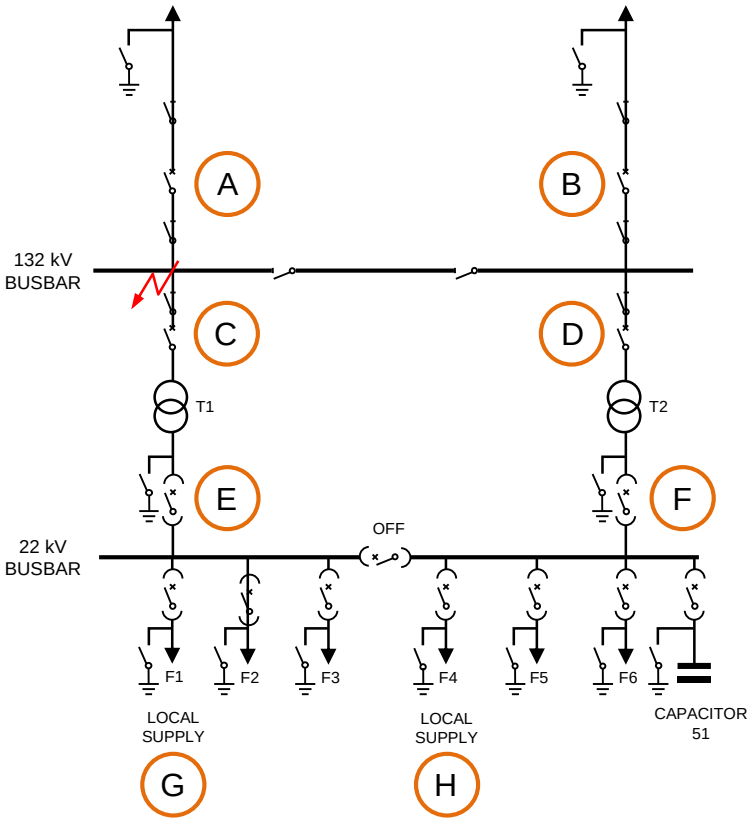

Figure 13-15 Black indoor substation

An switching operator is called out by HPCC to a substation with an indoor distribution switchboard.

1. The switching operator must contact HPCC upon arrival at the substation. The operator notes the substation is black.

2. Upon inspection of transmission relay panels the operator finds flags 60, 61, and 50 have operated on the BUS ZONE panel. Figure 13.9 shows both transmission circuit breakers (A), and (B) have tripped, and transformer circuit breakers, (C), (D), (E), and (F) have tripped. The switching operator also notes the distribution feeder circuit breakers are all in the 'on' position, but with no load shown on ammeters.

3. The flagging indicates that there has been a red–white overcurrent fault on the primary busbar.

4. Relay operations and flags must be logged and then reset.

5. Bus zone trip relay (50) in particular must be reset.

6. A detailed inspection of the whole substation yard must be carried out, but concentrating on the transmission busbar.

7. Details of substation inspection and flagging must then be phoned through to HPCC.

8. It is found that two large wing span birds have shorted out the red and white phases. The birds are dead on the ground beneath the busbar, and there is no severe damage that would prevent power from being restored. (In the event of severe damage - isolation, earthing, and an EAP for repair will be required).

9. Discuss closing the transformer ring with HPCC.

10. HPCC will close the two 132kV transmission circuit breakers (A) and (B) restoring the transmission network.

11. All distribution feeders will normally be tripped to minimise inrush currents. Feeders with local supplies should be given restoration priority.

Note In above step where feeder inrush current will not be a problem some feeders may be left on. Priority should be given to leaving local supply feeders on.

---

12. HPCC close the transformer circuit breakers (C) and (D) on the transmission side of the transformer as they have an extra close/trip facility after tripping initially. This will energise the transformers.

13. HPCC close the transformer circuit breakers (E) and (F) on the distribution side of the transformer as they have an extra close/trip facility after tripping initially. This will energise the distribution busbars.

14. If t closed, HPCC close local supply feeders (G) and (H) restoring 415/240VAC to the relay room.

15. With the energisation of the distribution busbars, local supply feeders (G) and (H) will provide 415/240VAC to the relay room if left closed. (If not left closed in step 11, HPCC can now close local supply feeders (G) and (H) to restore local supply.

16. HPCC restore remaining feeders and capacitor banks whilst monitoring transformer load as restoration proceeds.

17. HPCC confirm with switching operator the restoration is complete.

Example 2

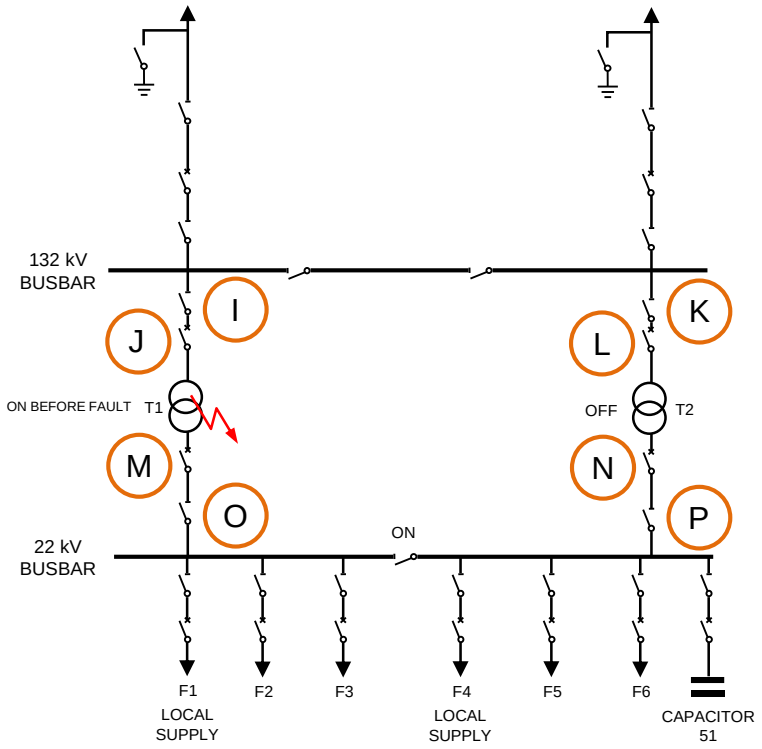

Figure 13-16 Black outdoor substation

A switching operator is called by HPCC to a 'black sub' situation in an outdoor substation. Only one of the two transformers is being used. Local supplies come from pole-mounted transformers just outside the substation on two of the feeders. All circuit breakers in the substation are spring-charged with a trip-close-trip facility. Relay panel indication is still available because it is fed by batteries.

Note If relay panel indication is not available (for example, 240V AC indication), the switching operator must check the condition of each circuit breaker at the circuit breaker itself.

Flags on the 132kV Tx1 relay panel include 40 and 50.

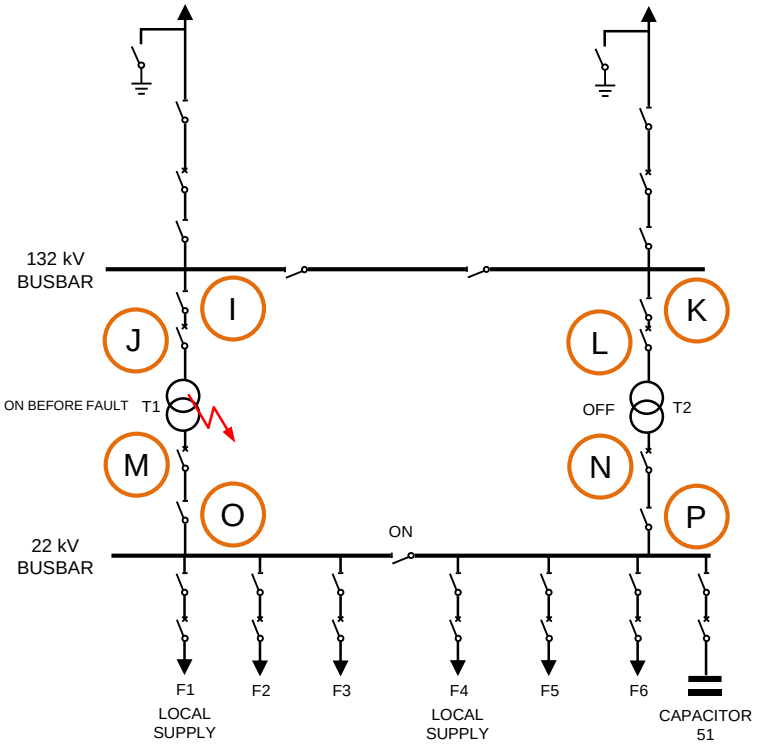

Figure 13-16 shows both transformer circuit breakers (J) and (M) have tripped.

1. The switching operator must contact HPCC upon arrival at the substation.

2. Relay operations and flags must be logged and then reset.

3. Upon investigating the substation and apparatus from the ground, the operator finds a cat has scaled the transformer, and has shorted the red phase bushing to earth.

4. HPCC must now be contacted and the results of yard investigation and protection flag checks passed on.

5. It is decided with HPCC that the quickest way to restore power is to energise the substation, via the second transformer, T2.

6. Check transformer number 1 (T1) circuit breaker J is OFF, set to local then open disconnector (I) and Danger–Do Not Operate (D–DNO) tag.

7. Check T1 circuit breaker M is OFF, set to local then open disconnector (O) and D–DNO tag.

8. As the circuit breakers are equipped with the trip-close-trip function, check disconnector (K) is ON.

9. HPCC close circuit breaker (L) energising from the transmission side of T2.

10. HPCC set the T2 tap changer to manual and adjusted to the same tap as the transformer that has tripped by HPCC, then restore T2 tap changer to auto.

11. HPCC trip all distribution feeders as the distribution feeder circuit breakers remain on.

Note In above step where feeder inrush current will not be a problem some feeders may be left on. Priority should be given to leaving local supply feeders on.

---

12. HPCC closes circuit breaker N, then power is restored to the 22kV busbar.

13. HPCC closes feeder F1 and F4 restoring the 415/240VAC local supply to the relay room.

14. HPCC restore remaining feeders and capacitor banks whilst monitoring transformer load and voltage as restoration proceeds.

15. HPCC confirm with operator the restoration is complete.

16. HPCC/operator must notify the relevant Asset Manager who will ensure that testing and/or repairs are carried out as soon as possible.

13.9.2 Inrush Current

Following loss of supply many customer appliances remain switched on. Due to this when supply is restored the diversity of the load which normally occurs is lost. This results in a higher than normal load current which tends to increase with long outages to a value about twice normal load current.

When a transformer or feeder is re-energised after being out for some time, that resultant inrush current can cause tripping of the transformer and/or feeder circuit breakers due to operation of overcurrent protection.

The inrush effect is more likely to be a problem at a time when feeder loads are high and close to the feeder rating limit. They are less of a problem during overnight or other low load periods.

The usually practice adopted by HPCC is to trip all feeders however where feeder inrush current will not be a problem some feeders may be left on. Priority should be given to leaving local supply feeders on.

13.10 Capacitor Banks

Capacitor banks are used in zone substations mainly for power factor correction. They are normally fed from the distribution busbar, and protected by circuit breakers in a similar way to distribution feeders. They come in various voltage and reactive power ratings depending on the substations requirements.

Switching of capacitor banks is carried out manually by HPCC (see Figure 13-17).

Isolation and earthing of the capacitor banks is reasonably straight forward, and is done in a similar manner to normal distribution feeders. In addition, the neutral or star point must also be earthed. A switching program is required for access to capacitor banks.

To isolate a capacitor bank circuit the capacitor bank circuit breaker is switched off and then isolated as follows:

- **Indoor switchgear**
    - circuit breaker is racked down/out and the circuit and busbar shutters locked and D–DNO tagged, or
    - circuit breaker is racked down/out and the cubicle door locked and D–DNO tagged and the racking mechanism locked and D–DNO tagged to prevent racking in.
- **Outdoor switchyard**
    - opening and D–DNO tagging the associated busbar disconnector.

If access to the capacitor bank equipment is required, testing and earthing must still be carried out, and an Electrical Access Permit issued.

Capacitor banks are fitted with a time delay interlocking system to prevent access to the capacitors for a preset time interval following de-energisation (see Figure 13-17). This gives the capacitors internal ‘bleed’ resistors time to discharge any stored energy within the unit.

When the capacitor is switched off, an interlock key is released from the appropriate relay panel. This key can then be inserted into the interlock box. When the timer has timed out (approximately 10 minutes), another key is withdrawn from the box. This key is used to gain access to the capacitor bank, or the capacitor compound.

Capacitors must be given enough time (typically 10 minutes) after de-energising to allow discharge before earthing and shorting out of the main bank is carried out.

Note As capacitor banks play a very important part in the running of a transmission/distribution system, any faults or outage times on capacitor banks should be kept to a minimum.

Customers with sensitive electronic equipment may be affected by capacitor switching if they do not provide adequate protection. This is because voltage spikes or transients can be generated during the switching of capacitor banks. Capacitor banks are normally designed so that switching effects are within the limits set by the relevant Australian Standard.

Problems associated with capacitor banks must be resolved quickly, because they are essential for compensating the reactive power in the load, especially during summer. (Failure to compensate could result in load voltage issues and system failure).

Figure 13-17 also shows an earlier capacitor bank control panel with on – off time clocks. Because HPCC will switch the capacitor as required by system conditions, these time clocks are no longer required and are progressively being removed.

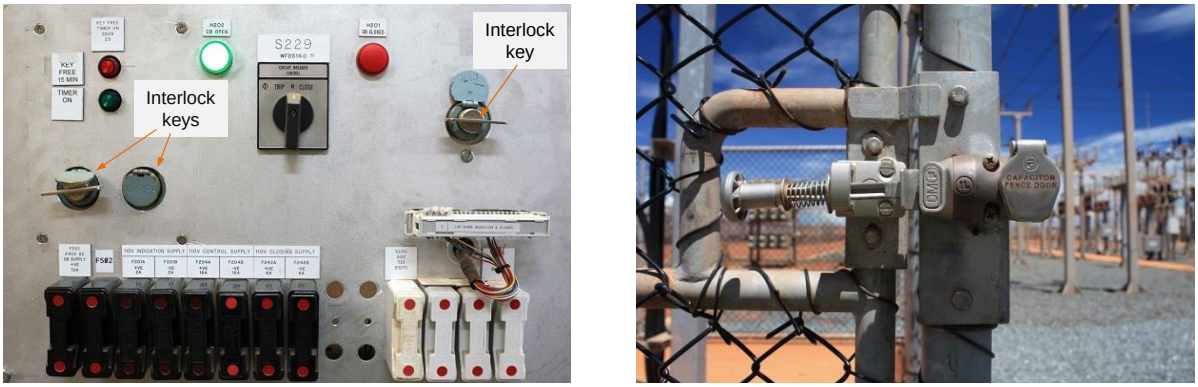

Figure 13-17 Capacitor bank key interlocks

13.11 Secondary Isolations

When isolating equipment within a substation it is important for the operator to remember that isolated equipment can sometimes be back fed from another source. Therefore it is important that all sources of supply are isolated, examples of these include voltage transformers, tap changer supplies etc.

Below are examples for consideration.

13.11.1 Transformers

Special points of isolation

Zone substation transformers have a secondary side VT installed for the purpose of AVR regulation and indication local and remote voltmeters. The secondary of this VT may require to be isolated, further details are provided in Section 13.11.2.

Some Zone substation transformers have tertiary windings supplying a station transformer. When access is provided for work on the Zone substation transformer the primary and secondary sides must be isolated and the tertiary winding connected station supply transformer must also be isolated. This is usually done on the local supply transformers 415V fuses.

Indoor switchgear-mounted auxiliary VT supply transformers (used for metering, closed voltage regulation etc.) will be required to be racked out and bus shutters locked and D–DNO tagged.

With the auxiliary VT supply transformer mounted in the power transformer, the VT secondary LV winding will have to be isolated by removal of fuses or links, or by switching off circuit breakers. These isolation points must be D–DNO tagged.

Transformer tap changer control must be switched to ‘manual’.

If a transformer parallelling scheme is installed, all transformers must be switched to independent, and D–DNO tagged.

With multiwinding transformers, all windings must be isolated and earthed.

13.11.2 VT Isolations

Voltage transformer isolations need to be considered to prevent the possibility of back energising the transformers. Where a VT is within an isolated area, the secondaries of this VT must be isolated if there is any possibility of the VT being back fed from any another AC source.

For example in a common panel where bridging of the VT secondaries to other VT secondaries or AC supplies could occur, the VT are must have its secondaries isolated. Where VT secondary isolation is required this must be included as a simple secondary isolation on a Secondary Isolation Schedule after the primary isolations, proving de-energised and earthing steps have been completed due to the fact that the VT’s can be used as a reference point for some earth switch interlock schemes.

Where VT secondaries are isolated as above, a step must also appear in the restoration section of switching program. This can typically be done at the protection panel or VT marshalling box by isolating at the appropriate fuses or MCBs (miniature circuit breakers).

When writing a switching program in PoA, it is recommended a text step be included in a switching program that prompts the SWOP to carry out / organise the VT isolation.

Note: Failure to restore VT secondaries could prevent protection schemes from operating correctly.

Note: DC isolations must be carried out before VT isolations.

13.12 Substation Isolation and Earthing

In a substation, sections of busbar or apparatus requiring earthing must be earthed from all points of supply.

Figure 13-18 shows the isolation area within four isolation points and the work area within four program earths to allow maintenance access to the disconnectors HP801.4, HP802.4, HP803.4, and HP804.4, and associated busbar junction. Note in Figure 13-18 that the isolation area is inside the red dashed area, and the isolated and earthed area inside the green dashed area is the safe work area.

The Recipient in Charge is responsible for the application and removal of necessary working earths. If multiple disconnectors are to be worked on at any time, a working earth would be necessary at points A or B. This is because the disconnectors being worked on may all be open at the same time resulting in the junction point between the disconnectors being unearthed. The unearthed section could result in workers receiving an electric shock due to induction.

Note Depending on site specific secondary wiring arrangements secondary isolation on Transformer T1 VT may be carried out. See Section 13.11.2.

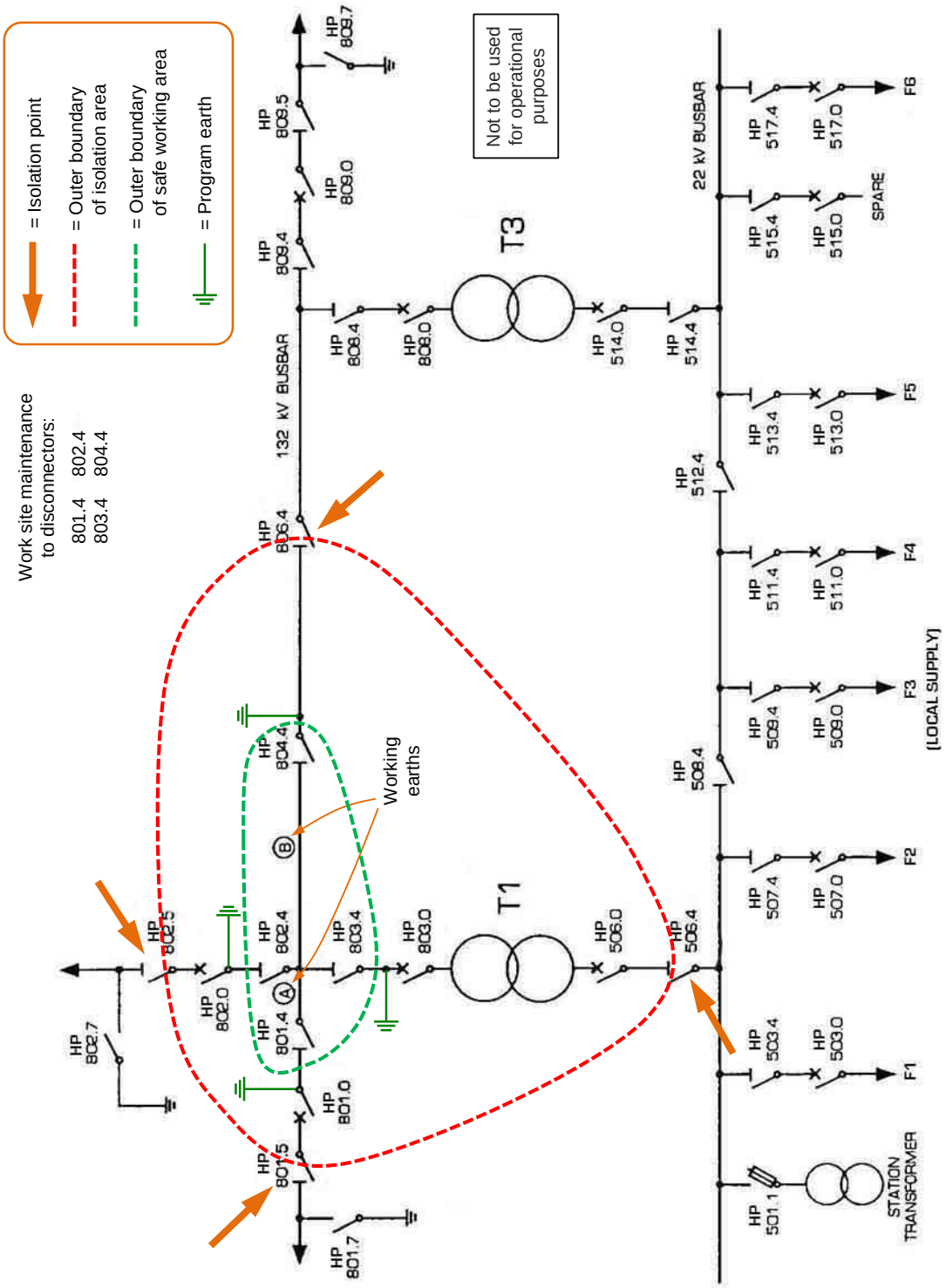

Figure 13-18 Substation earthing

Figure 13-19 shows the program earths necessary for operators to have access to disconnector HP808.4, circuit breaker HP808.0, and transformer T3.

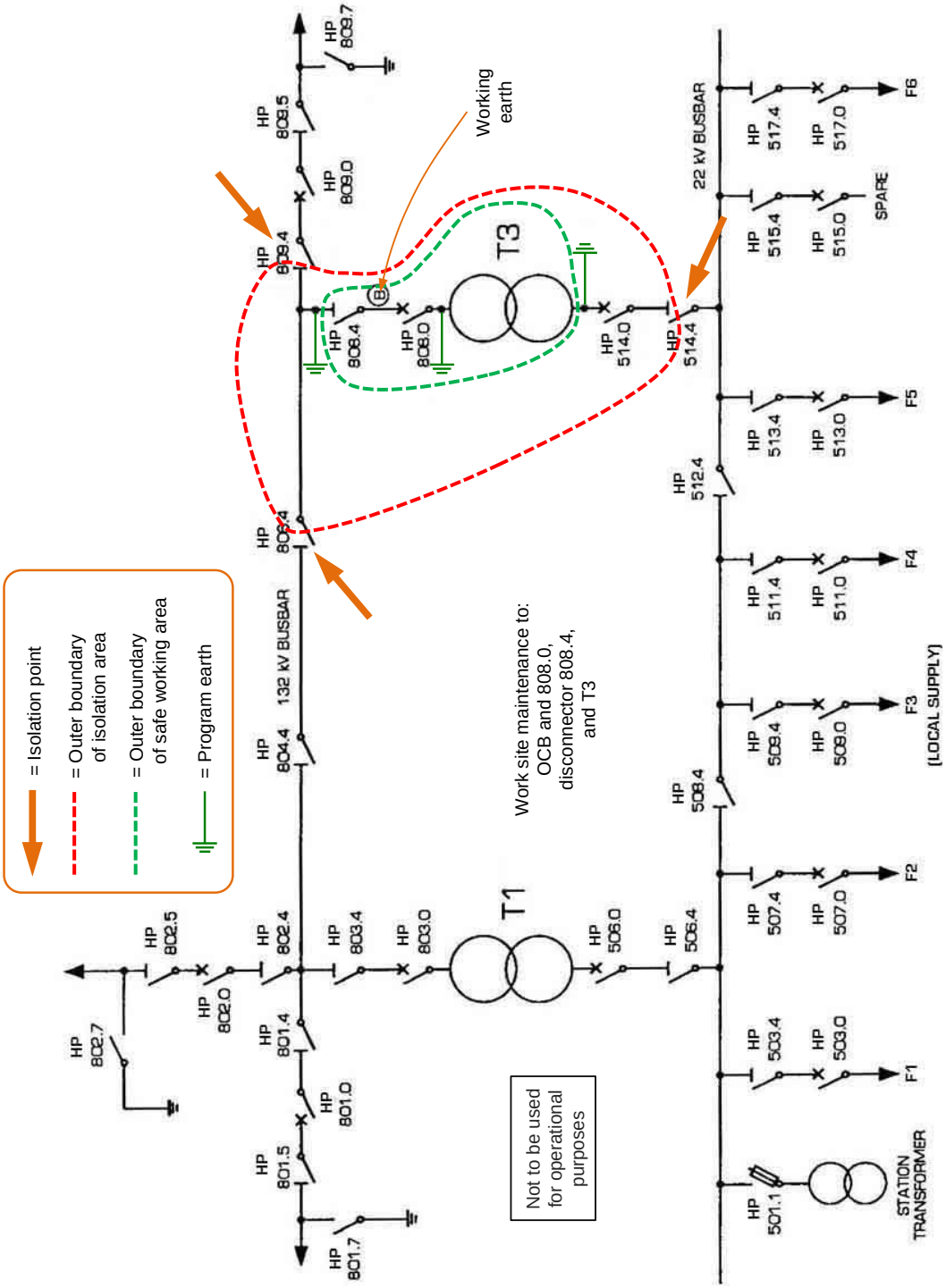

Figure 13-19 Substation earthing

The transformer T3 is earthed on each side in order to prevent:

- energisation from the busbars
- energisation from the voltage transformers.

A working earth may be required at point B to earth this source of supply. This is necessary if the circuit breaker HP808.0 is to be worked on while the disconnector HP808.4 is open.

Note Depending on site specific secondary wiring arrangements, secondary isolation on Transformer T3 VT may be carried out. See 13.11.3.

13.13 Identification of Safe Work Areas

Rope flagging and other approved methods are used to define the safe work area within the isolated area as designated by the program earths. Flagging should not be tied onto, or run around structures that are carrying live electrical apparatus.

Where necessary, flag stands or bollards (see Figure 13-20) can be used to support the flagging.

An entrance point in the rope flagging should be left open for the access of personnel and equipment. The entrance should be marked with one or other of the standard signs (see Figure 13-21) depending on the nature of work being carried out.

Every person working under the work permit must use the designated entrance point to enter and leave the safe work area.

Under no circumstances should access to or from the safe work area be achieved by crossing the flagging.

Switching operators issuing access permits are responsible for ensuring a safe access to the safe work area and for minimising risks associated with access near live plant. They are also responsible for personally briefing the Recipient in Charge of a work party in relation to the safe work area and the proximity of live plant.

The Recipient in Charge is responsible for briefing every member of the work party in relation to the safe work area and the proximity of live plant.

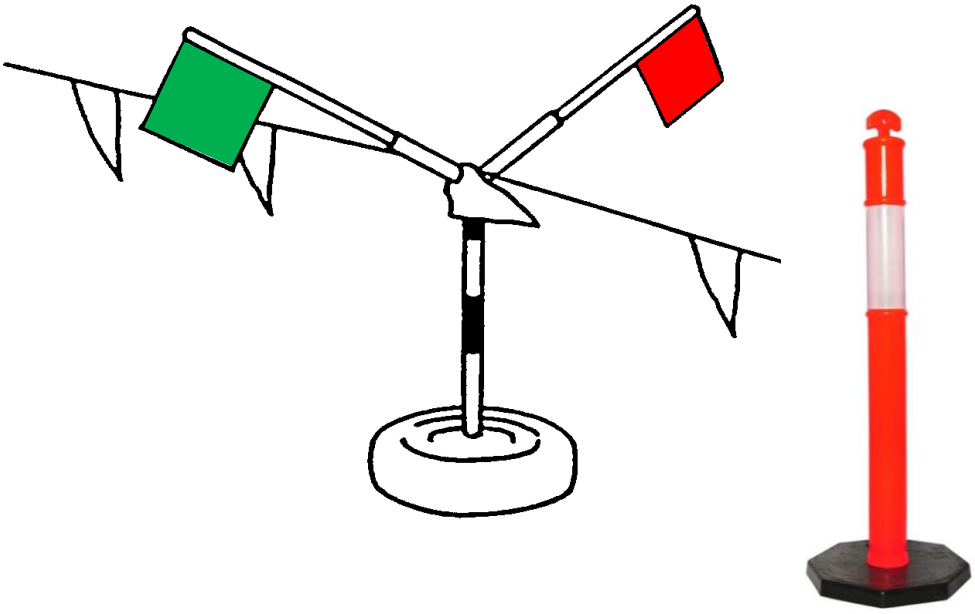

Figure 13-20 Flag stand supporting rope barrier and bollard

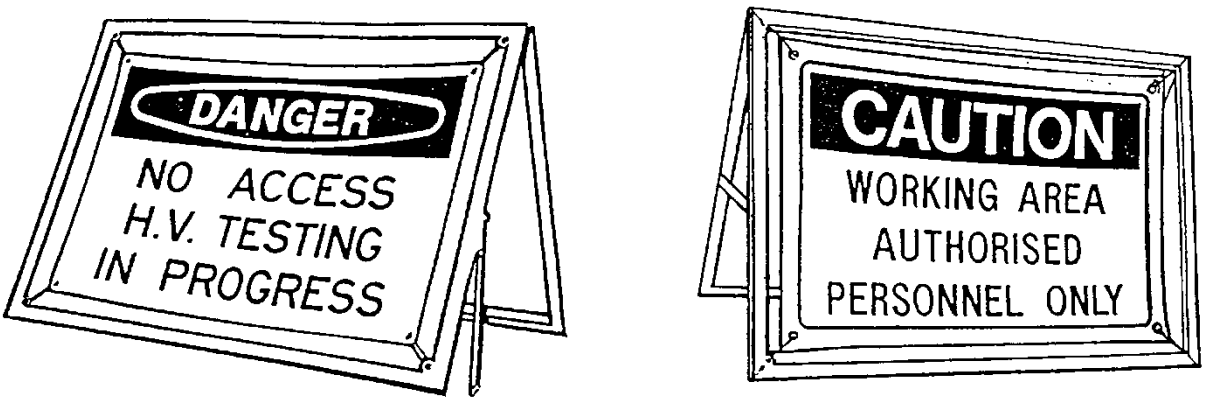

Figure 13-21 Safety signs

13.14 Protection Relay Reporting

Protection relays used by Horizon Power are fitted with indicators to show when a protection operation has occurred and indicate the nature of the fault and, to a limited extent, its location. To interpret relay indications these relay indicators are numbered, and should be reported to and logged by HPCC. Relay indications should be double-checked and recorded in the substation logbook before the relay is reset.

The HPCC Controller may require the switching operator to stand by at a substation until a reclose has been attempted. Alternatively the operator may be required to isolate the circuit and issue a work permit should repairs be necessary. This would normally be done using an emergency switching program.

13.15 Zone Substation Equipment Keys

On the transmission side of a zone substation:

- Disconnectors are padlocked with a standard Horizon Power lock – NK6 or NMK2.
- Each earth switch is uniquely locked with individual padlocks and the individual key is kept in the relay room.

On the distribution side of a zone substation:

- Lockable disconnectors are padlocked with a standard Horizon Power lock – NK6 or NMK2.
- Indoor circuit breakers are padlocked with a standard Horizon Power lock – NMK2.
- Indoor switchboard earth switches are locked with the Horizon Power earthing lock (same as the distribution RMU earth switch lock).

Because space and/or size constraints of specific switchgear may not allow the fitting of locks as described above, alternative locks may be used. In this instance keys are located in the relay/switch room.

13.16 Outages

An outage on any item of transmission switchyard apparatus (either primary or secondary) can affect system security.

All outage requests must be made to the System Operations Manager who will assess any potential impacts of the outage request against other known planned outages and system security considerations.

The Transmission Calendar should be checked by outage applicants prior to submitting their outage request to determine whether other planned outages have already been scheduled.

Outage requests to the System Operations Manager must be made at least 10 business days before to the planned outage.

After review of the outage request the System Operations Manager will advise the outage applicant of approval, concerns or potential retiming of the outage request.

Following approval of the proposed outage, the switching operator will submit a switching program. The switching program must be checked and approved by a second switching operator who is authorised at the same switching level.

SECTION FOURTEEN

Transmission Lines

Table of Contents

List of Figures

List of Tables

No table of figures entries found.

14. Transmission Lines

14.1 Introduction

This section relates to all 66kV, 132kV, and 220kV transmission lines.

Transmission lines carry bulk electrical power from power stations to the general load areas via terminal and zone substations. Horizon Power's Pilbara Grid transmission lines are show below in Figure 14-1.

The naming and numbering of transmission lines are described in Section 15 of this manual.

The interconnection of power stations, terminals and zone substations to form the electricity grid reduces the dependency upon any particular power station, or transmission line.

Generally the system can tolerate the loss of a single transmission line interconnecting power stations, terminal substations or zone substations. However, the impact of the removal of further interconnections between terminal substations has greater ramifications than those between zone substations. This is because:

- total loss of supply to a terminal substation generally affects a far greater number of consumers than the loss of a number of zone substations

- an uncleared, or slow clearing fault on a transmission line can cause the system to lapse into an unstable condition resulting in possible total system shutdown

- the levels of power being transferred on the transmission line between terminal substations is usually much greater than that between zone substations. As one feed into a terminal substation is removed, the loading on the others is increased (no automatic protection will limit the line loading)

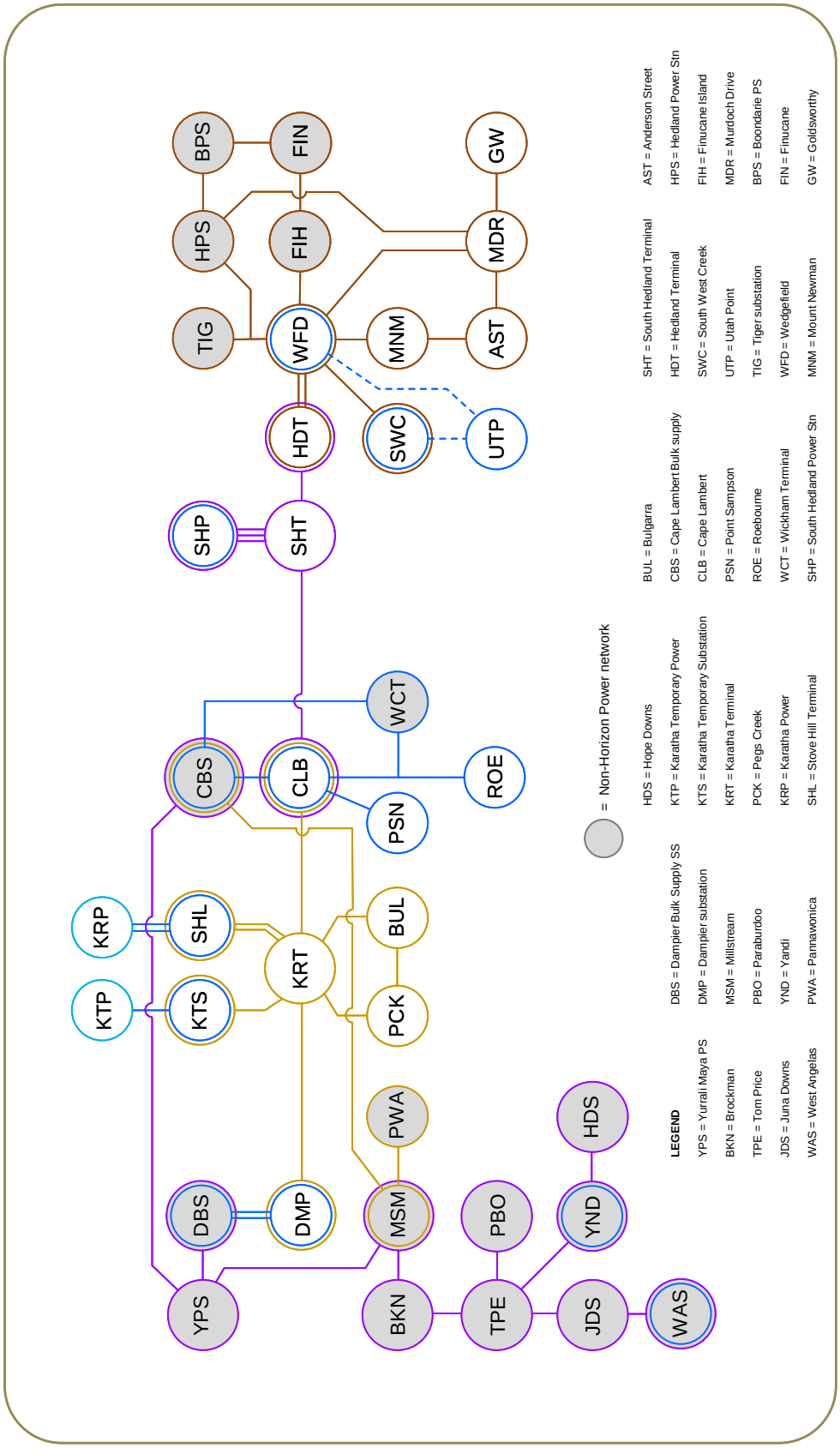

Figure 14-1 Horizon Power's Pilbara Grid transmission system

14.2 Restoration of Lines to Service Overnight

When planning the switching of transmission lines for maintenance, consideration must be given to the effect that this will have on system security. Of particular concern is where either a major customer, or one or more zone substations could be put at risk.

Taking lines out of service for maintenance usually poses some risk to system security, however, it is considered that this can be minimised by restoring lines to service when work has been completed for the day.

An example of this can be seen by referring to the diagram of the Pilbara Grid (formally known as the North West Interconnected System, or the NWIS, shown in Figure 14-1). If we look at the 132kV transmission line ring Karratha Terminal (KRT), Bulgara (BUL), Pegs Creek (PCK) and back to Karratha Terminal, we can see that if the KRT-BUL81 line were out of service for maintenance, and the KRT-PCK81 line tripped, it would result in the loss of supply to both BUL and PCK Zone substations. This would blackout Karratha township and there is not alternative power source.

The requirement to return a line to service overnight may not be applied in every instance. However, in planning an outage you should always start by determining how a return to service can be achieved. This should take into account the practicality and cost effectiveness of doing so while at the same time providing the maximum possible security of the system.

14.3 Line Isolation and Earthing

If a line is to be taken out of service for access, or for work to be done in the vicinity, the Transmission Outage Request process given in Section 17.1.1 must be followed. All work required on transmission lines must follow the requirements of the *Electrical Safety Standards.*

The following additional requirements shall also apply.

14.3.1 Earthing

Once a line is isolated, prior to the application of any earth, the line must be proven de-energised using an approved test instrument, e.g. a Modiewark (see Manual One, Section 10).

The switching operator, as part of the switching program, shall apply program earths at each point of isolation. It is the working parties Recipient in Charge responsibility to apply working earths either side of the work site.

Note When relinquishing the work permit, it is important that the Recipient in Charge of the working party sign off that all working earths have been removed, giving the number and location of those that were applied.

14.3.2 Work Permits

Of the work permits issued within Horizon Power, there are three which are generally applicable to transmission lines:

- the Electrical Access Permit (EAP)
- the Vicinity Authority (VA)
- the Sanction to Test (STT).

The EAP and the VA work permits are the most commonly used. All work permits and their associated procedures are explained in detail in Manual One, Section 8.

Electrical Access Permit

When work requires direct contact with the line, the line must be isolated, proved de-energised and earthed, and an electrical access permit issued.

Vicinity Authority

When working under a Vicinity Authority the Safe Approach Distance (SAD) must be maintained at all times and the line must be treated as live.

When a Vicinity Authority has been issued on a transmission line and that line trips, it must not be reclosed until the working party's Recipient in Charge has been contacted to confirm that the working party is safe and was not involved with, or caused, the trip.

For this reason a Vicinity Authority on the line must be relinquished and cancelled at the end of each day's work or as otherwise approved by HPCC.

Sanction to Test

The Sanction To Test (STT) permit is used for high voltage testing and the commissioning of apparatus.

14.4 Fault Location on Transmission Lines

When a fault occurs on a transmission line a switching operator will be called to attend the substation. The following information must be gathered by the switching operator as quickly as possible, and passed on to HPCC:

- details of protection flags from both ends of the line, and
- details of circuit breaker operation.

Where there is no underground cable or transformers connected, depending on weather conditions and system security requirements, HPCC is at liberty to reclose the line immediately after a trip.

The decision whether to undertake a trial reclose will be made after assessing the prevailing system conditions, any relevant information received, current weather conditions and the possibility that lightning may have been the cause of the trip.

If an initial reclose is unsuccessful a full line patrol will be arranged to determine the cause of the fault. When the fault has been established the line should be isolated and earthed as soon as possible, and an Electrical Access Permit issued to repair the fault.

Horizon Power transmission lines are normally not fitted with an auto reclose function however an exception does occur with the MDR-GW71 transmission line being fitted with an auto reclose function.

Note All faults or potential fault situations on transmission lines must be reported to HPCC immediately they become known to Horizon Power personnel.

14.5 Working with Other Operating Authorities

The Pilbara Grid interconnects the Horizon Power network with other network operators and their associated electrical apparatus.

This creates a requirement to work with these third parties to make apparatus safe for maintenance and commissioning activities. A key component of this requirement is the use of Operating Agreements and the adherence of all parties to meet their respective responsibilities.

14.5.1 Operating Agreements

An Operating Agreement (OA) is an agreement between two Operating Authorities. It is used to confirm that an electrical apparatus operational state will be held in an agreed state until the OA is cancelled.

An OA is used when one party needs to work on an item of plant or electrical apparatus which requires isolation and/or earthing from an adjacent Operating Authority.

The Operating Agreement recipient shall verify the isolations and earthing points stated on the Agreement, and may apply additional locks and tags.

An OA is not a work permit. It does not authorise work to be undertaken. A work permit must be issued to allow work to take place. The conditions stated on the work permit must reference the OA. An OA is issued by a switching operator.

For standard outages, the outage requestor will write the associated switching program, unless otherwise agreed. For the commissioning of other Operating Authority apparatus, Horizon Power will usually write the switching program.

The issue and relinquishment of Operating Agreement must be recorded as steps in the switching program.

14.5.2 Responsibility for Operations

There are multiple responsibilities for switching operations depending on the ownership of the apparatus involved.

Horizon Power Control Centre staff will coordinate operations with the other Operating Authority. (See Section 17.2 for further details.)

Where operations involve switching on the Horizon Power system, the Horizon Power switching operator will be the Person in Charge.

The Horizon Power switching operator will operate apparatus which is owned by another Operating Authority where that apparatus is located within Horizon Power switchyards.

14.5.3 Work Permits

An Horizon Power switching operator will be responsible for issuing and cancelling work permits on all apparatus owned by Horizon Power.

Following established procedures, HPCC will log all permits issued or cancelled, ensure that all affected apparatus is tagged, and that the other Operating Authority is advised of all relevant details.

The other Operating Authority will be responsible for issuing and cancelling work permits on their own apparatus. Where the permit affects Horizon Power apparatus, the other Operating Authority shall advise HPCC of all work permits issued and cancelled.

This same procedure shall apply for a shared isolation point for permits issued by both Horizon Power and the other operating authority.

14.5.4 Faults and Alarms

Faults which occur on the Pilbara Grid will likely result in remedial action being required by Horizon Power and also other network operators connected to the grid.

Horizon Power faults or alarms should be reported immediately to HPCC. HPCC will then advise the other network operators of the problem, and arrange remedial action.

HPCC will issue a System Disturbance Advice to advise other network operators following a fault on the Horizon Power network which has impacted the grid.

When a fault occurs within the network of another network operator they are also responsible for providing advice to all grid participants.

SECTION FIFTEEN

Terminal Substations

Table of Contents

List of Figures

List of Tables

15. Terminal Substations

15.1 Introduction

Terminal substations are the bulk supply points of the interconnected system.

They are located either at the power stations, or at strategic points in the interconnected system.

The following section gives both a broad view of what can be found in a terminal substation, and the practices that must be followed when switching.

15.2 Substation Configurations

Horizon Power uses three types of terminal substation configurations:

- single busbar
- double busbar, and
- breaker and a half.

It is important to realise that a substation, on completion of construction, is not always in its finally intended form. That is, it may have spacings and structures for the breaker and a half configuration, but initially it is configured as a single busbar substation. This leaves the option open to alter the configuration at a later date at much lower cost.

15.2.1 Single Busbar

The single bus layout employed in a small number of terminal substations is essentially that described in Manual One, Section 6.

For a terminal substation, the single busbar arrangement is mainly employed for:

- busbars at the transmission voltages (220kV, 132kV and 66kV) can be used in the early development of a terminal. Figure 15-1 below shows a different application where Cape Lambert Terminal 33kV single bus connects T1 and the 132kV Karratha Terminal line to T2 and the 220kV Hedland Terminal line.

- reactors, station transformers, etc., connected to the tertiaries of terminal substation step-down transformers.

In Figure 15-1, T2 tertiary single bus is connected to the station transformer and the reactor banks.

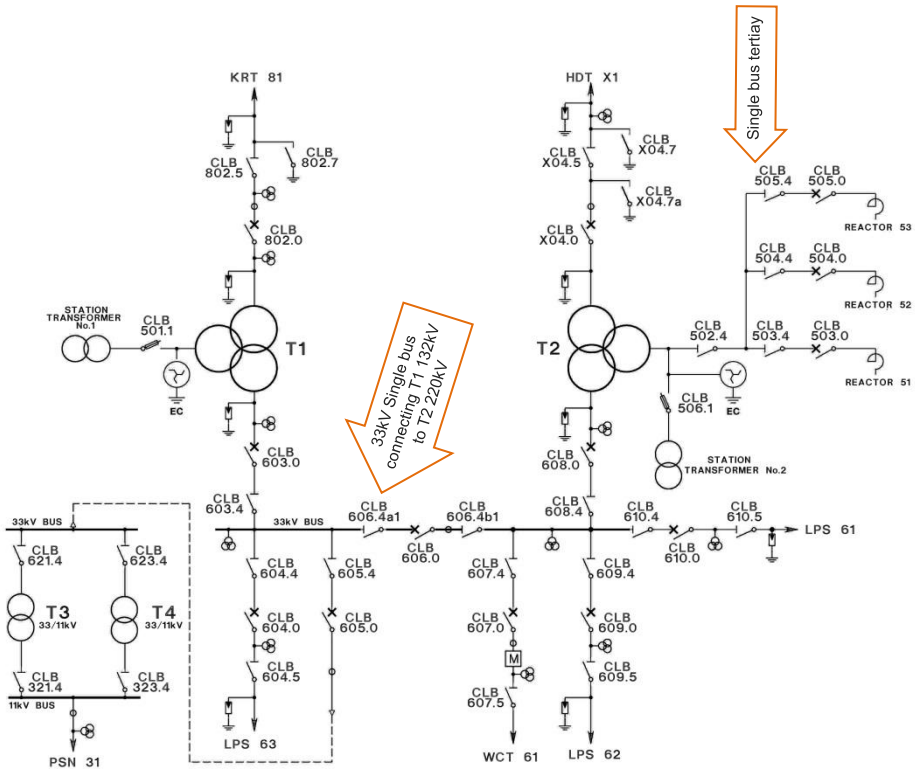

Figure 15-1 Single busbar terminal substation configuration with tertiary single busbar

15.2.2 Double Busbar

This busbar arrangement is essentially as described in Manual One, Section 6.

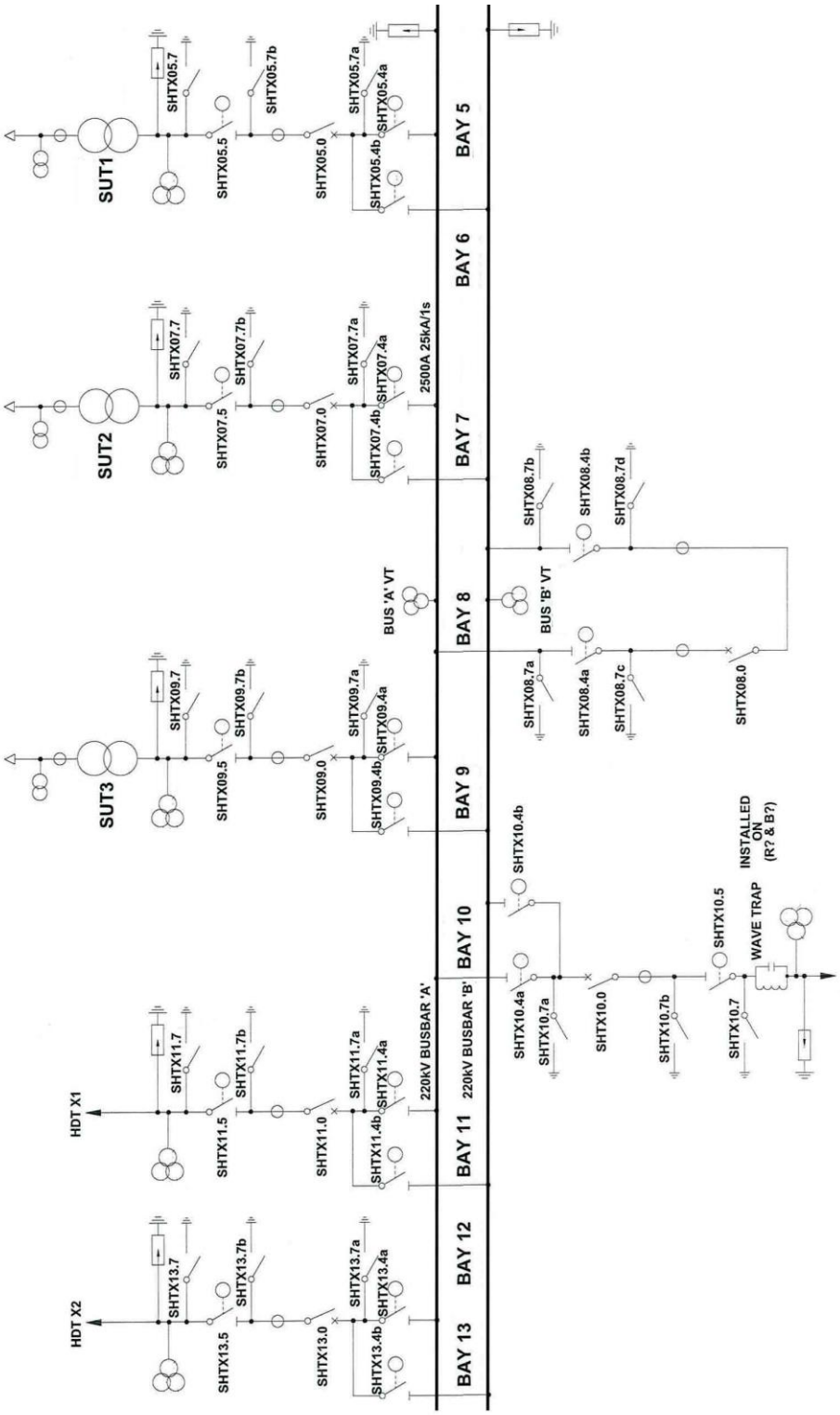

Figure 15-2 Typical double busbar configuration in a terminal substation

The major differences between a double busbar arrangement in a terminal substation and a zone substation are:

- the terminal substation busbar protection schemes may be more complicated
- due to the higher power transfers and the need for higher security in terminal substations, double busbar configurations may use bus section circuit breakers in addition to bus coupler disconnectors
- terminal substations tend to have a higher fault level, and the equipment, primary electrical connections, and earthing requirements are of a higher rating.

15.2.3 Breaker and a Half

The breaker and a half configuration is a common configuration used in the Horizon Power standard for terminal substations on the 132kV and 220kV systems. Figure 15-3 shows a typical layout.

It provides maximum flexibility and security, and can accommodate a large number of circuits by adding additional bays. The breaker and a half (or 'one and a half breaker') terminology comes from the fact that in one bay, three circuit breakers serve two circuits, that is, one-and-half circuit breakers per circuit. Thus, each circuit is effectively controlled by two circuit breakers, and either breaker can be taken out of service for maintenance without losing the associated circuit.

A major advantage of this configuration is that for a busbar fault, only the faulted busbar is disconnected, and all other circuits remain interconnected.

In addition, with a fault which trips both busbars there is still a connection between circuits. This has particular advantages at power stations because it means that the generators remain connected to the system.

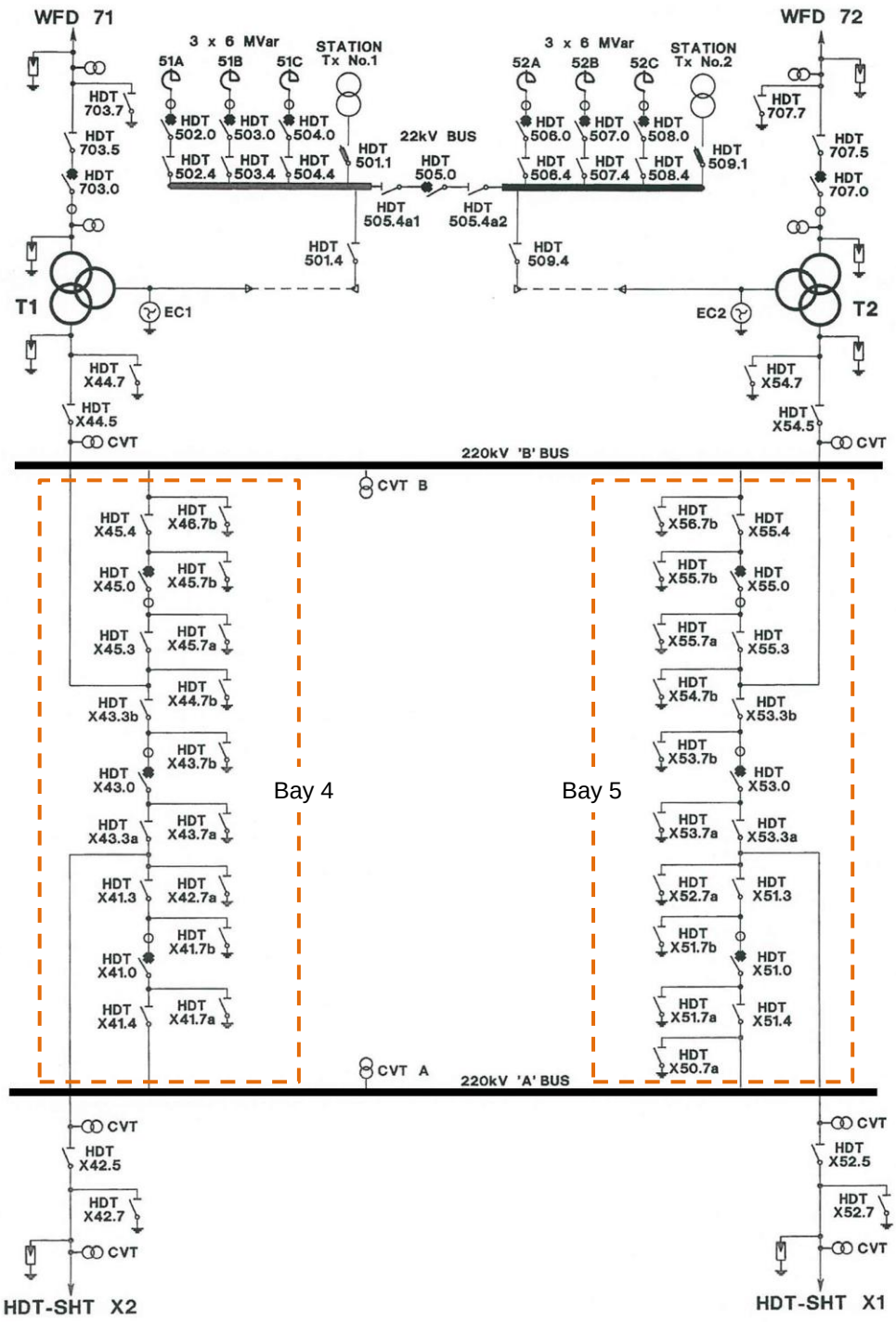

Figure 15-3 Breaker and a half terminal substation

As stated earlier, substations may start in a simple form, and over the years develop up to their final form. This particularly applies to breaker and a half substations.

Shown in Figure 15-4 below is an earlier form of Karratha terminal before the addition of Stovehill Power Station. This is a mesh configuration with four circuits and four circuit breakers. The simplified form of the mesh is also shown.

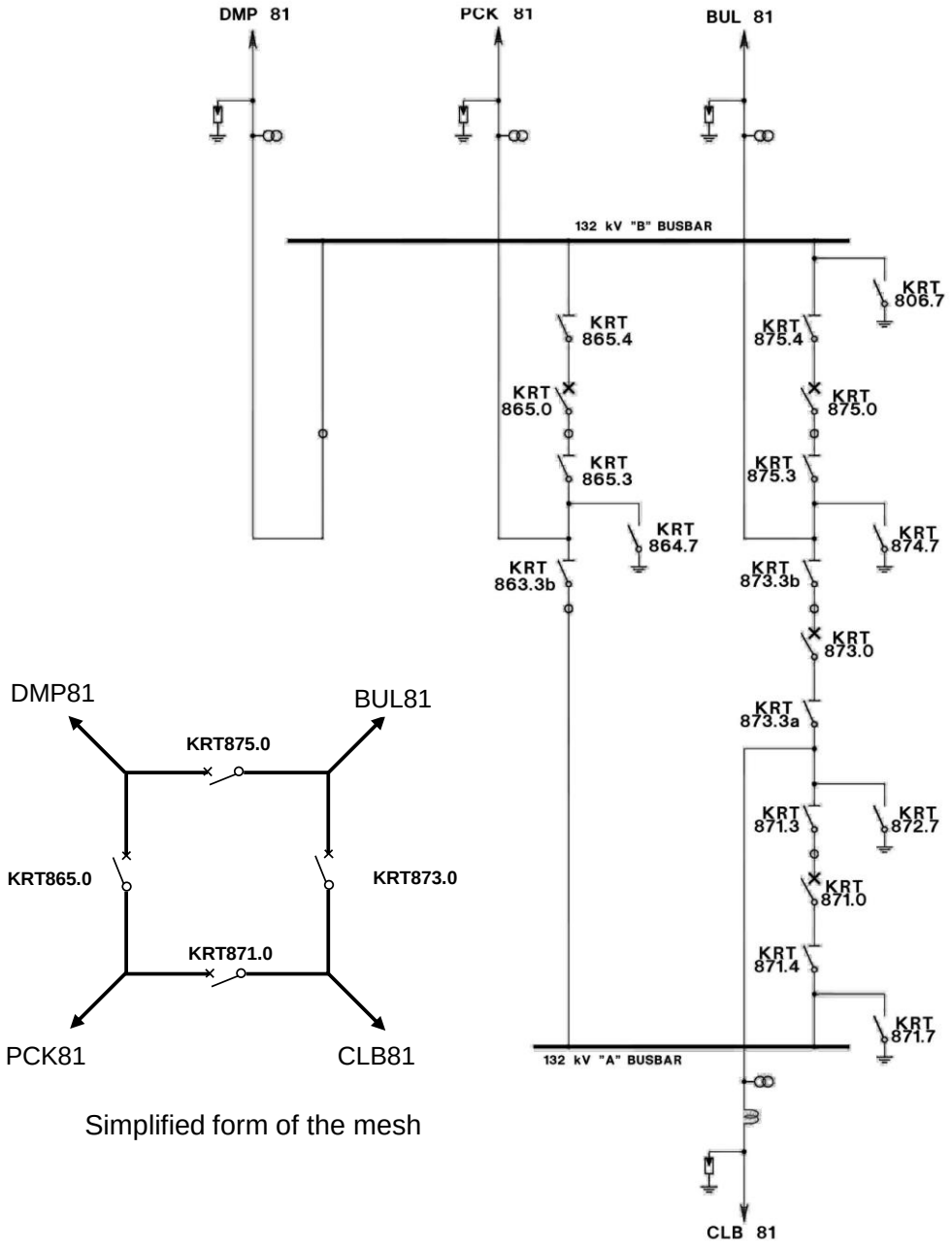

Figure 15-4 Mesh arrangement
partially developed breaker and a half arrangement

Figure 15-5 below shows the apparatus added to complete Bay 5 and Bay 6 which accommodates the addition of SHL81 and SHL82 circuits connecting Stovehill power station. This switchyard has changed from a four switch mesh shown in Figure 15.4 to a three bay breaker and half configuration shown below.

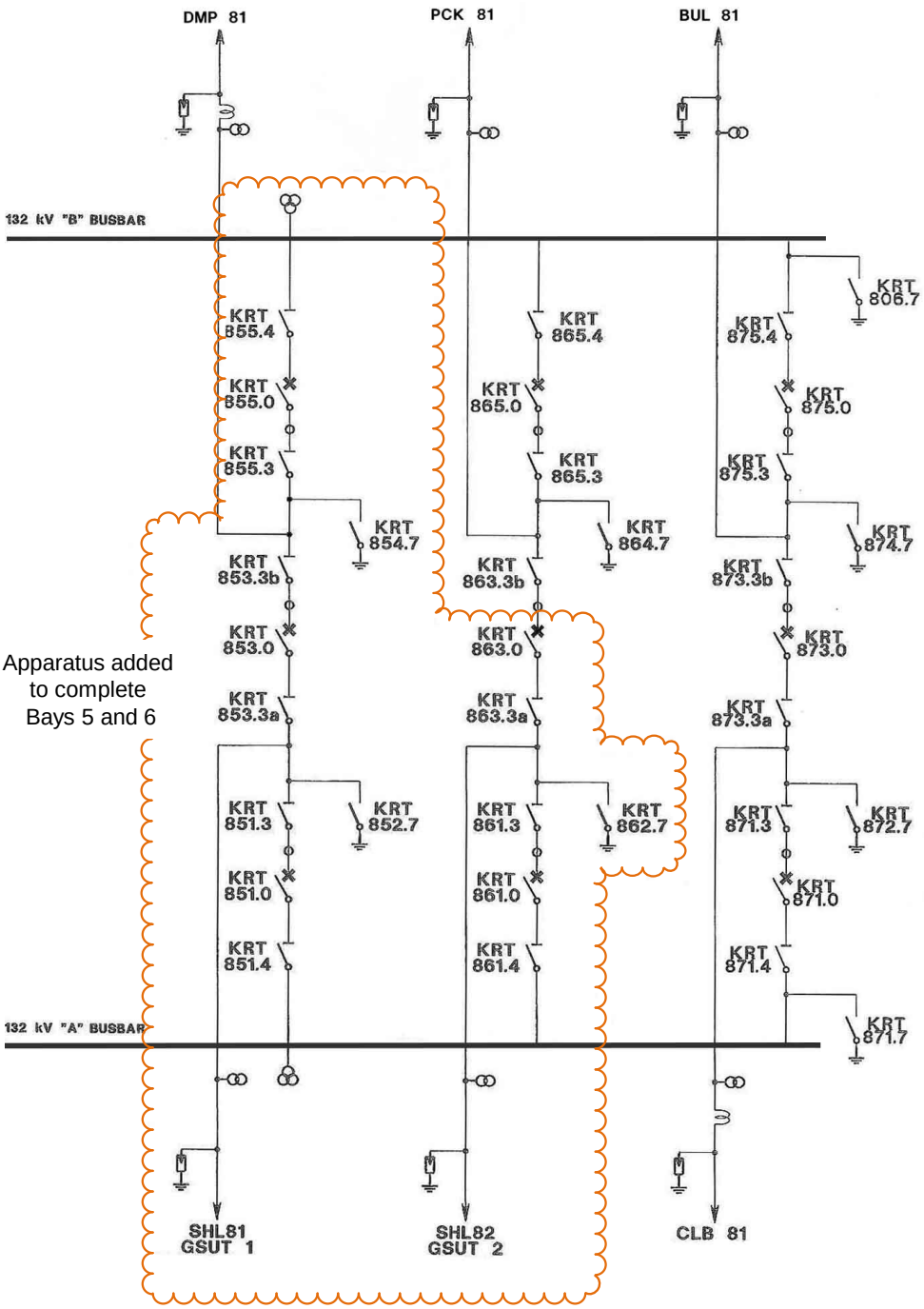

Figure 15-5 Breaker and a half arrangement with three fully developed bays

15.3 Access

Terminal substations by their nature and design must occupy a large amount of land, and thus there is a large fenced area. There are however, as few gates as possible, while maintaining reasonable access.

Due to their importance to system security, terminal substations have security systems designed to monitor access of personnel to the site.

15.3.1 Issue of Keys

Entry gates to transmission substations in the Pilbara Grid are secured with a standard Horizon Power BiLock lock. To maintain adequate security only authorised personnel have keys for entry to terminal substations. Keys are issued to an individual, and when an individual leaves a position, the key must be returned to their formal leader or Regional Manager.

15.3.2 Gates

Relay rooms doors have remote alarms monitored by HPCC. Perimeter gates are not monitored.

All gates must be closed and locked at all times.

15.3.3 Advising HPCC

For safety reasons, and in the event of something happening on site requiring attention, it is important that HPCC are aware that there are persons on site.

All persons entering and leaving terminal substations must advise HPCC via mobile phone, relay room phone or by relay room Horizon Power radio if phone service is not available. In the case of a work party, the Person in Charge, or a person nominated by them shall be responsible for advising HPCC.

The entry, and exit of all personnel to a terminal substation is recorded by HPCC. The person making the visit, and the reason for the visit shall also be recorded by the visitor in the Substation Log Book which is located in the relay room.

15.4 Plant Designation

All Horizon Power terminal stations and zone substations have an Horizon Power-issued abbreviation. Examples of these are shown in Table 15.1.

Substation	Abbreviation
Karratha Terminal	KRT
Anderson St	AST
Pegs Creek	PCK

Table 15.1 Substation abbreviations

Lines are designated by an abbreviation of the names of the substations that they connect, for example:

- Karratha Terminal to Pegs Creek line would be KRT-PCK.

15.4.1 Lines

As it is possible that there may be more than one line between two substations, simple naming of the lines is not enough, thus lines are further identified by a two digit number after their name.

The first digit gives the voltage of the line (see Table 15.2).

The second digit identifies lines that are in parallel, by simple numerical sequence, the first line would be number 1, the second number 2, etc.

For example:

- The South Hedland Terminal 220kV to Cape Lambert Terminal number 1 line would be identified as the SHT-CLB X1 line. The letter ‘X’ included in the line identification indicates the line is 220kV.

- There are two 66kV lines between Hedland Terminal and Wedgefield substation, the first line is identified as HDT-WFD71 and the second line is HDT-WFD72. The number ‘7’ included in the line identifications indicates the lines are 66kV.

A full list of the numbers / letter associated to line voltages are shown in table 15.2.

Number / Letter	Voltage (kV)
0	LV
1	3
2	6
3	11
4	13-17
5	22
6	33
7	66
8	132
X	220

Table 15.2 Line number / letter and associated voltages

15.4.2 Substations

Busbars

Busbars are designated as busbar A, B, C, etc. For example - AST 66kV is double busbars designated as the busbars identified as 'A' busbar and 'B' busbar (see TN30).

When these busbars are split into bus sections they are then further designated as A1, A2, A3, etc., or B1, B2, B3, etc. For example – PCK 22kV 'A' single busbar is split into two sections 'A1' and 'A2' busbars (see TN34)

Where a substation is fitted with a Transfer or Bypass busbar, the bars are normally called the TRANSFER BUS, or BYPASS BUS. For example - AST 22kV has a main 22kV busbar and a transfer busbar (see TN30).

Switchgear

Each item of switchgear (e.g. circuit breaker, disconnector, earth switch) in a substation is uniquely identified by a 1 - 6 character alphabetical numeric prefix, and a four digit number.

The official substation abbreviation forms the alphabetical prefix of the plant (e.g. HDT, AST, BUL).

The four digit number after the substation name prefix will describe the particular piece of equipment.

Table 15.3 below shows the numbering convention in terminal substations.

Busbar configuration	Substation Abbreviation	Voltage	Circuit identification		•	Apparatus type
All configurations (except breaker and a half) e.g. PCK802.4	PCK	8	Circuit number or bay number (two digits) 02		•	4
Breaker and a half e.g. KRT873.0	KRT	8	Bay number 7	Position in bay 3	•	0

Table 15.3 Numbering convention in terminal substations

- As with transmission lines the first number designates the voltage of the equipment (see Table 15.2).

- In all configurations except breaker and a half yards, the second and third digits together identify which bay the equipment is in.

  (See Figure 15-4 above - PCK802.4 – Pegs Creek 132kV busbar disconnector in circuit 02)

- In breaker and a half configurations, the second number indicates the bay number, and the third number indicates which section of the bay the equipment is located.

  Section 1 being that circuit breaker and disconnectors adjacent to the ‘A’ busbar, Section 5 that circuit breaker and disconnectors adjacent to the ‘B’ busbar, and Section 3 those in the middle of the bay.

  (See Figure 15-4 above – KRT873.0 – Karratha Terminal 132kV circuit breaker in the middle section of bay 7.)

- The fourth digit (always after the decimal point) designates the type of equipment (see Table 15.4).

- For all configurations, except the breaker and a half configuration, the busbar disconnector identification numbers are suffixed by the letters A or B to show the busbar they are connected to.

- In breaker and a half switchyards the disconnectors either side of the position 3 circuit breaker have an 'a' and 'b' added to uniquely identify each disconnector. For example KRT873.3a and KRT873.3b.

For example:

South Hedland terminal double bus – SHTX09.4b is composed of the following:

- 1st digit (letter) 'X' indicates 220kV
- 2nd and 3rd digit '09' indicates bay 09
- decimal point ●
- 4th digit (+ letter) '4b' indicates the 'b' busbar disconnector

Number	Type of Equipment
0	Circuit breaker
1	Load break switch or interrupter
2	Fault throwing switch
3	Circuit breaker disconnector
4	Bus selector or bus disconnector
5	Major circuit disconnector
6	Minor circuit disconnector (e.g. VT)
7	Earth switch
8	Bypass disconnector

Table 15.4 Equipment type numbers

15.5 Control of Primary Plant

The primary plant within Horizon Power terminal substations can usually be operated at a number of different locations.

All items of plant can be manually operated in some form. Generally though, the philosophy employed in terminal substations is described as follows.

15.5.1 Circuit Breakers

Remote control and indication is normally provided at HPCC, with back-up remote control and indication on the relay rack or HMI (where fitted)in the relay building.

For maintenance purposes local closing can be performed at the circuit breaker mechanism box provided the circuit breaker is isolated from all sources of primary supply (i.e. adjacent disconnector are open). However, local tripping is possible anytime so long as the LOCAL/REMOTE switch, in the circuit breaker mechanism box, is selected to LOCAL. All circuit breaker mechanism box LOCAL/REMOTE switches must be left in the REMOTE position to enable remote control.

15.5.2 Disconnectors

220 kV

Modern 220kV disconnectors are frequently motorised (but not in all cases) due to their large physical size and the effort required to operate them. This facilitates remote operation from HPCC or the disconnector mechanism box.

For motorised 220kV disconnectors local control is also provided at the disconnector mechanism box. Similarly to the circuit breakers, the LOCAL/REMOTE switch for disconnectors must be set appropriately for the control mode required. However, due to interlocking arrangements motorised 220kV disconnectors may only be opened or closed when the corresponding circuit breaker is open.

132kV and below

Generally disconnectors at 132V and below are usually manually operated.

15.5.3 Earth Switches

Generally earth switches in terminal substations are manually operated.

The earth switch may be equipped with a 'NO-VOLT' interlock, such that the closing of the switch is inhibited if voltage is present on the conductor to be earthed. The interlock is such that prior to closing the earth switch, a button beside the operating handle is pressed. If there is no voltage present on the associated conductor, a solenoid is energised enabling movement of the operating handle.

At KRT both Stovehill circuit earth switches are castell key interlocked to ensure the associated Stovehill power station circuit is isolated before earthing at KRT can proceed (see Figure 15-6 below).

Figure 15-6 Earth switch castell key interlocking arrangement

---

Note Under no circumstances may this interlock be tampered with, except as part of the earth switch maintenance.

Note There are a variety of site specific interlocking arrangements in use, therefore operators must familiarise themselves with the background of the installation, and the operating requirements.

Note Testing for de-energisation of the line must always be carried out using the approved test instrument before the earth switch is closed.

Note All interlocks are simply a back-up device and these may fail. The switching operator should not solely rely on them. Remember to check switch identification and test for de-energised before closing the earth switch.

15.5.4 Transformers

Terminal substation transformers differ in voltage ratings and capacities. They are used to step down from transmission voltages (220kV, 132kV) to the zone substation transmission voltages (132kV, 66kV). They are the most expensive piece of apparatus in a terminal substation and therefore have appropriate protections installed to guard against faults.

Switching operators must not energise any terminal substation transformer that has tripped off due to a fault.

When confronted with this situation the switching operator must:

- contact HPCC
- check all associated relay panels and log protection flags
- visually inspect the transformer, and
- inform HPCC of exact details of the fault.

From the above information and following consultation with the relevant Asset Manager, a decision can be made whether or not to re-energise the transformer. Further investigations may be required.

As well as the normal type of protection relays (that is, overcurrent, earth fault) used elsewhere on the system, transformers have additional protection. These include alarms and trips that guard against:

- low oil level
- gas build up and oil surge (Buchholz)
- overheating (oil, windings).
- transformer differential
- restricted earth fault.

Details of the protection devices used to provide these alarms and trips are given in Sections 13.7.1 – Transformers of this Manual.

Note Cooling is an important factor in the rating of a transformer. It is essential that fans and pumps are working properly.

Alarms indicating cooling fan or pump failure should be treated with the urgency relevant to the transformer loading.

Note Unless approval is given by the relevant Asset Manager to HPCC, a switching operator must never attempt to put a zone substation transformer which has tripped on protection back into service, because of the risk that energising the transformer could do further damage.

15.5.5 Reactors

Reactors are used in terminal substations control transmission voltages, particularly at times of low reactive load demand. Reactors have various voltage and reactive power ratings.

Horizon Power has reactor banks at HDT and CLB for voltage control are a result of the reactive power produced the CLB-SHTX1 line at light load times.

The switching of reactor banks in terminal substations is carried out remotely by HPCC. The switching of terminal substation reactor banks does not normally cause any problems for customers.

15.5.6 Liquid Fuses

See Section 13.8.3 of this Manual for detailed information about zone substations liquid fuses / HRC fuses.

15.6 Switching in Terminal Substations

Remote operation of substation equipment allows the HPCC Controller to exercise a great deal of control over the Transmission network. Lines can be switched on or

off, transformer taps can be varied along with the operation of reactor banks to control reactive power flow, and maintain correct voltages over the system.

During switching, remote operation provides a safer alternative for the switching operator than standing alongside equipment whilst it is being operated.

When switching on the Transmission network it is essential for the switching operator to visually check switching program steps that have been carried out from a remote location.

Circuit breakers must always be checked for correct operation and the remote operation disabled before operating the circuit disconnectors. These checks and steps should be included as items on a switching program. It is important when confirming operation of a circuit breaker, the switching operator should always check the mechanical indicator, and not just the indication lights. This is because auxiliary switches operating indicator lights may go out of adjustment.

Circuit breakers have various different indication devices. The operator should become familiar with each.

Similarly, motorised disconnectors operated remotely should be checked by the switching operator to verify correct open and close operation. The disconnector contacts on each phase must be check to ensure the disconnector contacts are fully made on closing.

When motorised disconnectors are used as an isolation point the remote control facility and the motor supply or drive mechanism must be disabled to prevent operation.

15.6.1 Outages

An outage on any item of transmission switchyard plant, either primary or secondary, can impact system security.

All outage requests must be made to the System Operations Manager who will assess any potential impacts of the outage request against other known planned outages and system security considerations.

Outage requests to the System Operations Manager must be made at least 10 business days prior to the planned outage.

The Transmission Calendar should be checked by outage applicants prior to submitting their outage request to determine whether other planned outages have already been scheduled.

After review of the outage request the System Operations Manager will advise the outage applicant of approval, concerns or potential retiming of the outage request.

Following approval of the proposed outage the switching operator will submit a switching program. The switching program must be checked and approved by a second switching operator with the same level of switching authorisation.

15.6.2 Isolation and Earthing

The isolation and earthing requirements of a terminal substation are the same as a zone substation (see Section 13 of this Manual).

The following requirements apply to terminal substations.

- The locking of disconnectors and earth switches as described in Section 15.6.5 of this Manual.
- Earths shall be applied from all points of supply and at the work site
- Before application of earths, the isolated apparatus must be proven de-energised.

15.6.3 Permit To Work

No work of any kind is to be carried out within a terminal substation unless permission has been obtained, and the required work permits issued.

The types of work permits used in Horizon Power and the procedures for issue and cancellation of these permits are described in Manual One, Section 8.

Further detail on Horizon Power work permits for use in terminal stations can be found in Horizon Power's *Network Permit to Work Training Manual*.

15.6.4 Identification of Safe Work Areas

See Section 13.13 of this Manual for detailed information about identifying safe work areas.

15.6.5 Terminal Substation Equipment Keys

In terminal stations:

- Disconnectors are padlocked with a standard Horizon Power lock – NK6 or NMK2.
- Each earth switch is uniquely locked with individual padlocks and the individual key is kept in the relay room.

Because space and/or size constraints of specific switchgear may not allow the fitting of locks as described above, alternative locks may be used. In this instance keys are located in the relay/switch room.

15.6.6 Secondary Isolation

When an item of primary plant is taken out of service for work, consideration should always be given to the need for other isolations in addition to the primary isolation and earthing to make the plant safe to work on.

In substations, equipment that is remotely controlled is usually fitted with a LOCAL/REMOTE switch. Remote mode means that the equipment can only be operated from the substation HMIs, relay panel and/or from HPCC. Equipment fitted with LOCAL/REMOTE should normally be left switched to the REMOTE position whilst in service.

When selected to the LOCAL position, the equipment will only be able to be operated from the mechanism box. Circuit breakers, tap changers and remotely controlled disconnectors that are out of service for maintenance, or as points of isolation should be switched to LOCAL to prevent inadvertent operation from a remote position.

Remotely controlled equipment that is not fitted with a LOCAL/REMOTE switch must be rendered inoperable from the remote position. This may be achieved in most cases by isolating the DC control supply, or the removal of control links on the Supervisory Termination Rack.

Consideration should also be given to the need to isolate VT secondary circuits, to prevent unintentional back energisation of VTs. Such isolation points should be Danger–Do Not Operate tagged.

Alarm links will also need to be opened when plant is taken out of service to prevent nuisance alarms (on the isolated plant) being raised at HPCC.

All secondary isolations including alarm links should be entered onto the Access Permit or an attached Secondary Isolation Schedule (SIS).

15.6.7 Reclosing of Substation Bays after Circuit Isolation

Where a breaker and a half switchyard has line circuit .5 disconnectors installed, it is normal practice to isolate the line circuit on the .5 disconnector and then reclose the two bay circuit breakers. This maintains normal security to the other circuit in that bay, and the substation. This is commonly referred to as 'remeshing the bay'.

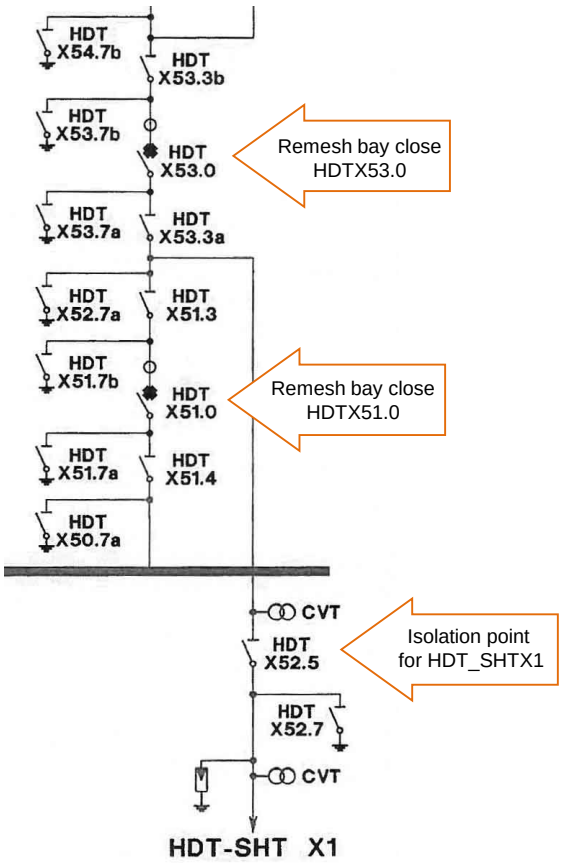

Figure 15-7 Remeshing of bay

To isolate the HDT-SHT X1 line, it is necessary to open circuit breakers HDTX51.0 and HDTX53.0, followed by line disconnector HDTX52.5.

Following the isolation, the bay should be remeshed, that is, HDTX51.0 and HDTX53.0 should be closed. This procedure should normally be included in switching programs. When restoring HDTX51.0 and HDTX53.0 must be opened line disconnector HDTX52.5 is closed. All steps associated with remeshing bays must be included in the switching program.

15.7 Terminal Substation Ancillary Systems

15.7.1 415 Volt Supplies

The 415V supplies to terminal substations can be supplied from a range of sources depending on the installation. The sources include:

- auxiliary transformers connected to the tertiary windings of the main power transformers
- station transformers supplied from the regional distribution system
- street 415V feeds
- third party generation sites.

The 415V supplies are fed into the 415V Distribution Board via a change-over board. This ensures that if there is a failure of one 415V system, a standby 415V supply is automatically switched into service.

The supplies can be selected for service or changed over from one to the other manually by operating the Feeder Selection Switch. Individual supplies can be isolated from the change-over panel by operating the CFS (Combination Fuse Switch) for that supply, or removing the associated supply fuses.

Failure of the 415V supply to a substation will result in a 415V FAIL alarm being sent to HPCC. It is important to investigate 415V failures promptly because essential equipment such as the 110 and 50 volts DC supplies, transformer cooling and tap changers could be affected.

15.7.2 Fire Alarms

Fire alarms are site specific and include the remote alarms being directed to :

- HPCC
- the local town fire brigade
- company fire brigade for Horizon Power switchyards located on other company sites which have a company fire brigade.

The fire alarms do not have a site bell as the site are usually unmanned.

Fire protection at terminal substations consist of smoke and thermal detectors in the relay buildings.

On response to an alarm, the fire brigade are to await the arrival of Horizon Power personnel before attempting to fight any electrical fires.

On arrival, the switching operator will complete a Job Risk Assessment before making access available to the fire brigade. Carefully check the clearances for movement of vehicles, and electrically isolate areas where the fire is occurring in conjunction with HPCC.

The switching operator is responsible for ensuring the site is secure after the emergency is clear.

15.8 Protection Relay Reporting

Protection relays used by Horizon Power are fitted with indicators to show when a protection operation has occurred and indicate the nature of the fault and, to a limited extent, its location. To interpret relay indications these relay indicators are numbered, and should be reported to and logged by HPCC. Relay indications should be double-checked and recorded in the substation logbook before the relay is reset.

The HPCC Controller may require the switching operator to stand by at a substation until a reclose has been attempted. Alternatively the operator may be required to isolate the circuit and issue a work permit should repairs be necessary. This would normally be done using an emergency switching program.

SECTION SIXTEEN

Transmission Protection

Table of Contents

List of Figures

List of Tables

16. Transmission Protection

16.1 Introduction

This section describes the basic principles of protection for transmission lines, terminal substations and zone substations.

The object of protection in an electrical system is to:

- reduce the risk of injury to staff and the public due to faults
- detect faults quickly so they can be removed
- minimise damage to all apparatus (including busbars, transformers, lines, etc.)
- ensure maximum reliability of supply by removing only the faulted section of the power system. This ensures that only the minimum number of customers are affected by the fault, and
- to ensure system stability.

The whole power system must be protected. This is achieved by dividing it into overlapping zones. If a fault occurs in a particular zone, only the protection system covering that zone should operate. Those systems relating to other zones should not operate. In some cases, adjacent zones may operate after a preset time-delay, to provide back up.

A protected zone is that portion of a power system protected by a given protection system or part of that protection system. Any fault occurring within a zone will cause circuit breakers in that zone to operate and trip. When this happens, protection equipment in other zones should not operate.

Protected zones for typical zone substations are shown in Figure 16-1.

The general concepts of the two types of protection adopted by Horizon Power are first examined in this section, that is, unit and non-unit protection.

Secondly, details of Horizon Power's protection arrangements for most transmission plant is examined.

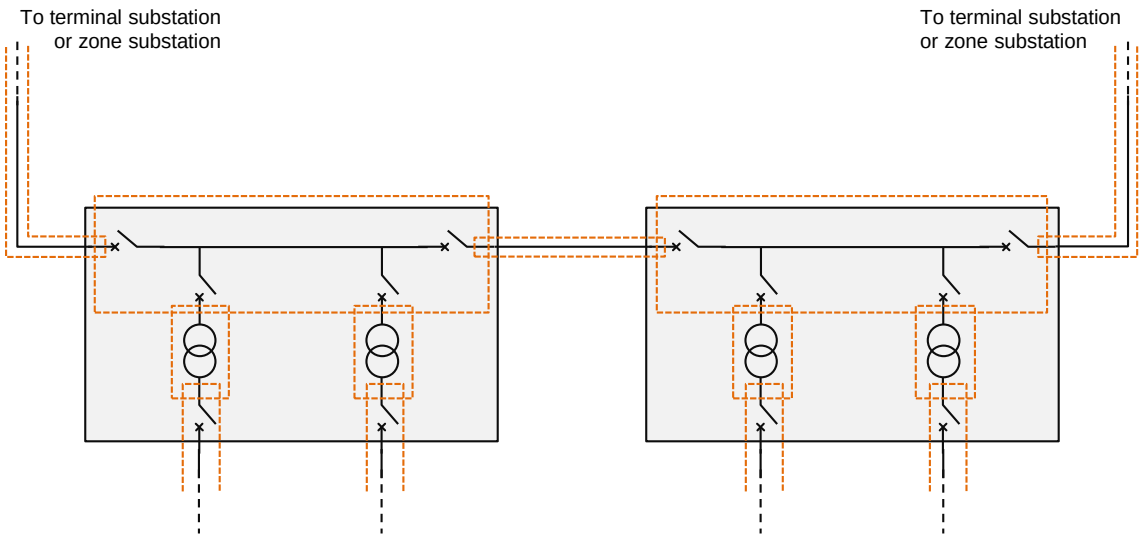

Figure 16-1 Protection zones – Typical zone substation

The following sections describe in detail the operation of the protection scheme.

To assist in the understanding of the protection principles, the explanations involve the use of electromechanical relays. However, the operating principles are still relevant to modern digital relays.

16.2 Unit Protection

The boundary of operation is clearly defined in terms of primary plant. Unit protection is designed to operate for abnormal conditions inside the protected zone while remaining stable for abnormal conditions outside the protected zone. This scheme requires current to be measured at each end of the zone.

Figure 16-2 shows a simple unit protection scheme, while Figure 16-3 shows only one phase of the scheme.

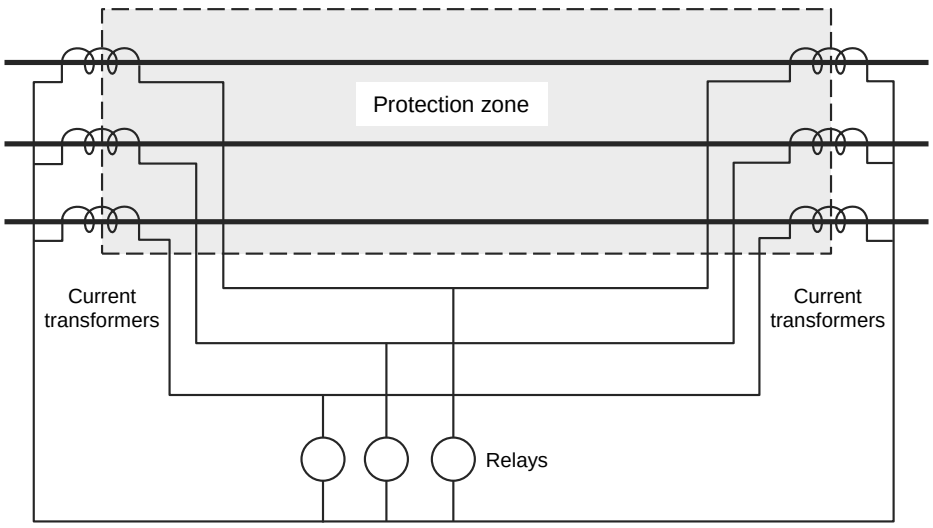

Figure 16-2 Unit protection

Unit protection is very simple in concept. Figure 16-3a shows the current transformer flows produced by a fault outside the unit protection zone. The current through the relay is zero if the two current transformers are identical. (In practice, however, the current transformers are never identical, therefore, a practical scheme requires the installation of stabilising resistors and voltage limiting devices). Figure 16-3b shows the situation for an internal fault. In this case, the current through the relay is not zero.

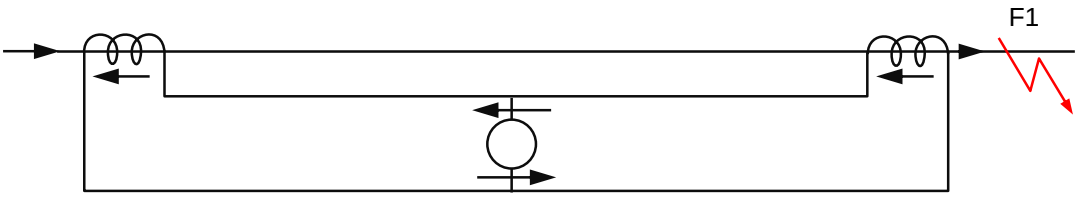

A. External fault

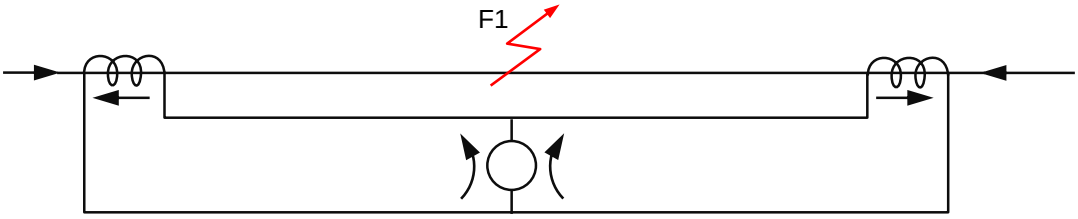

B. Internal fault

Figure 16-3 Relay current for external and internal fault

The unit protection scheme is inexpensive, fast acting and very stable. This ideal protection is used extensively for:

- transformers
- busbars
- reactors
- capacitors
- lines, and
- generators.

A number of unit protection arrangements are examined here: transformer, line protection using pilot cable (balanced voltage and circulating current), phase comparison carrier and digital differential protection.

16.2.1 Transformer Unit Protection

A typical auto transformer unit protection scheme is shown in Figure 16-4.

Each phase winding forms a three ended protected zone and the current transformers in the low and high voltage and neutral ends of the windings are connected in parallel to form a circulating current scheme.

All current transformers are the same secondary current rating and a simple instantaneous relay can be used, (the protection is unaffected by inrush current or tap changing).

The stabilising resistor ensures that the relay does not operate for faults outside the protected zone during the first few cycles when the current transformers may not faithfully transform the primary current.

The voltage limiting device prevents the relay from being damaged by the very large voltages which could occur due to the large current which would flow in it and the stabilising resistor when a fault occurs in the protected zone.

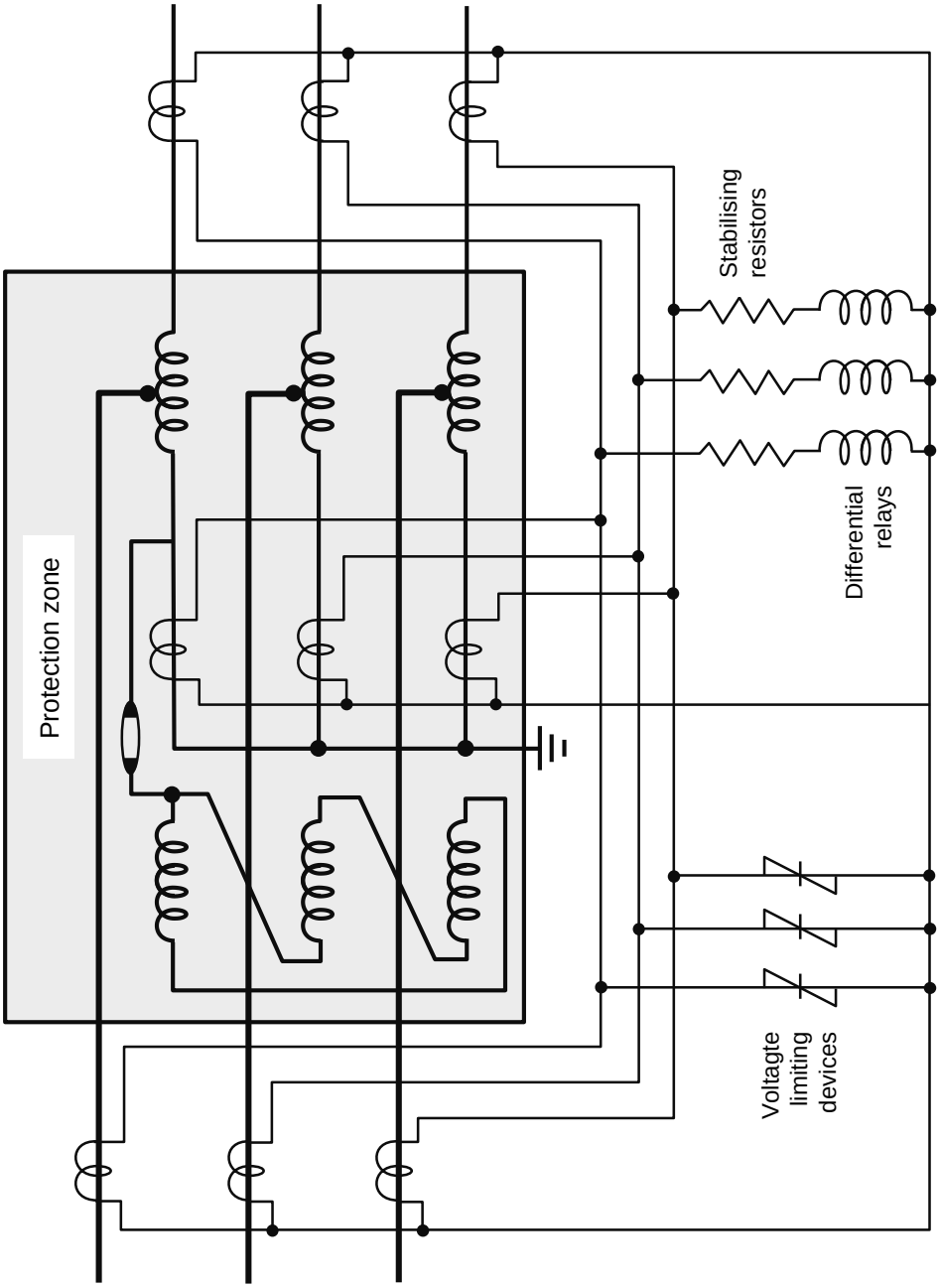

Figure 16-4 Typical auto-transformer unit protection

16.2.2 Pilot Unit Protection

Unit protection schemes are also used for overhead lines and underground cables, with these schemes it is more convenient to have relays at each end of the line connected by pilot cable.

For this application, the relays have both an operating winding and a restraint or bias winding. The bias winding provides stability, that is, it stops the relay operating for a through fault, while allowing operation of the relay for an internal fault. (Note that a *through fault* occurs outside the zone of protection.)

Two basic arrangements are used for pilot unit protection:

- balanced voltage (see Figure 16-5), and
- circulating current (see Figure 16-6).

Balanced Voltage

In Figure 16-5 the pilot voltages balance each other for an external fault. Most of the current flows through the restrain (bias) coil rather than the operating coil.

Circulating Current

In Figure 16-6 the pilot currents add at each end to produce a circulating current for an external fault. The majority of current again flows through the restraint coil.

A problem with these two different arrangements is that damage to the pilot cable may result in the following:

- open circuit of pilot cable – the circuit could trip in the circulating current arrangement for through faults or high load current
- short circuit of pilot cable – the circuit could trip in the balanced voltage arrangement.

This problem is summarised in Table 16-1.

Protection Type	Pilot Cable Open Circuited	Pilot Cable Short Circuited
Circulating Current	Trip	Inoperative
Balanced Voltage	Inoperative	Trip

Table 16-1 Potential problems

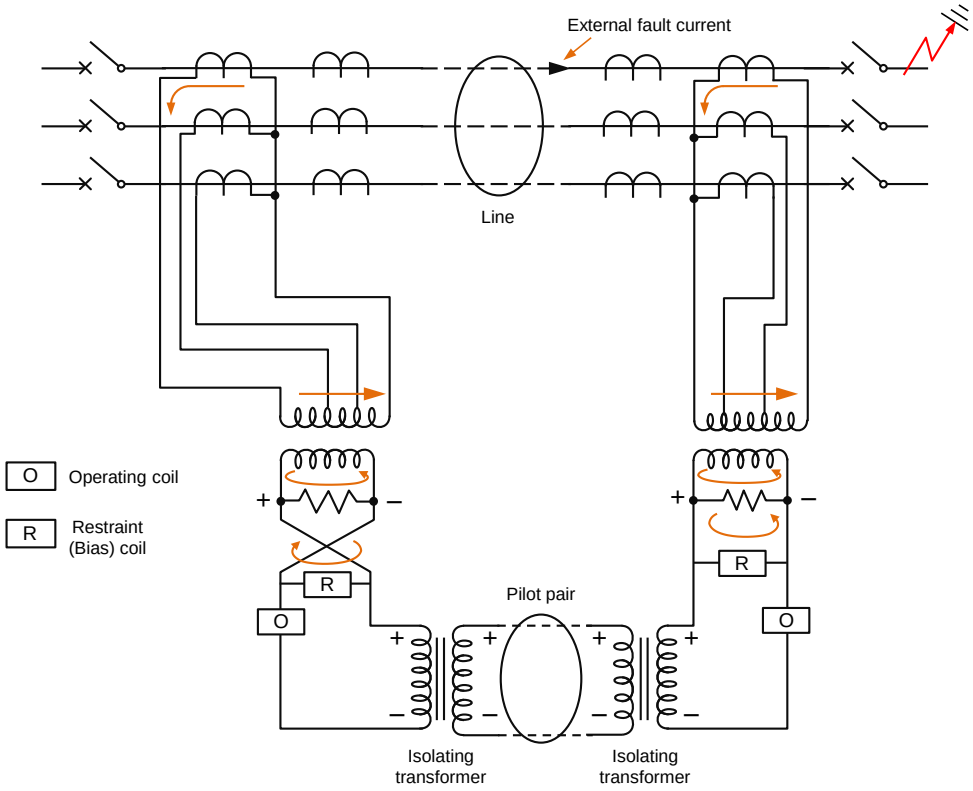

Figure 16-5 Balanced voltage protection

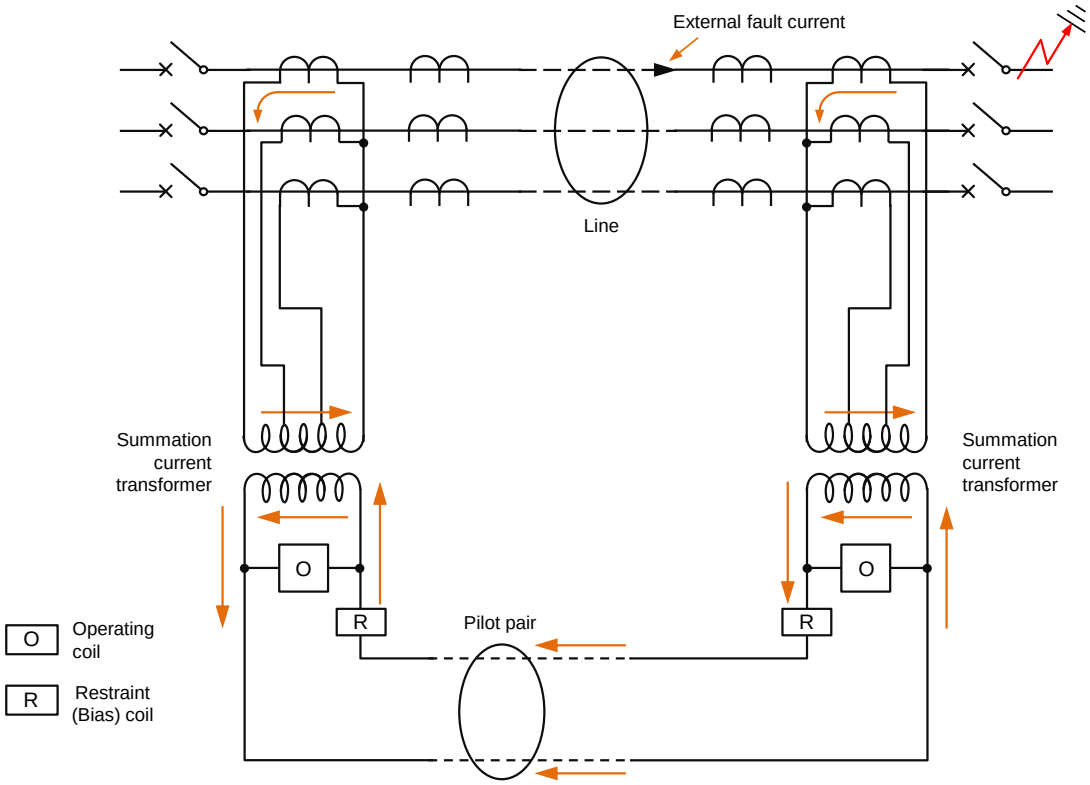

Figure 16-6 Circulating current protection

Figure 16-7 below shows a typical pilot protection.

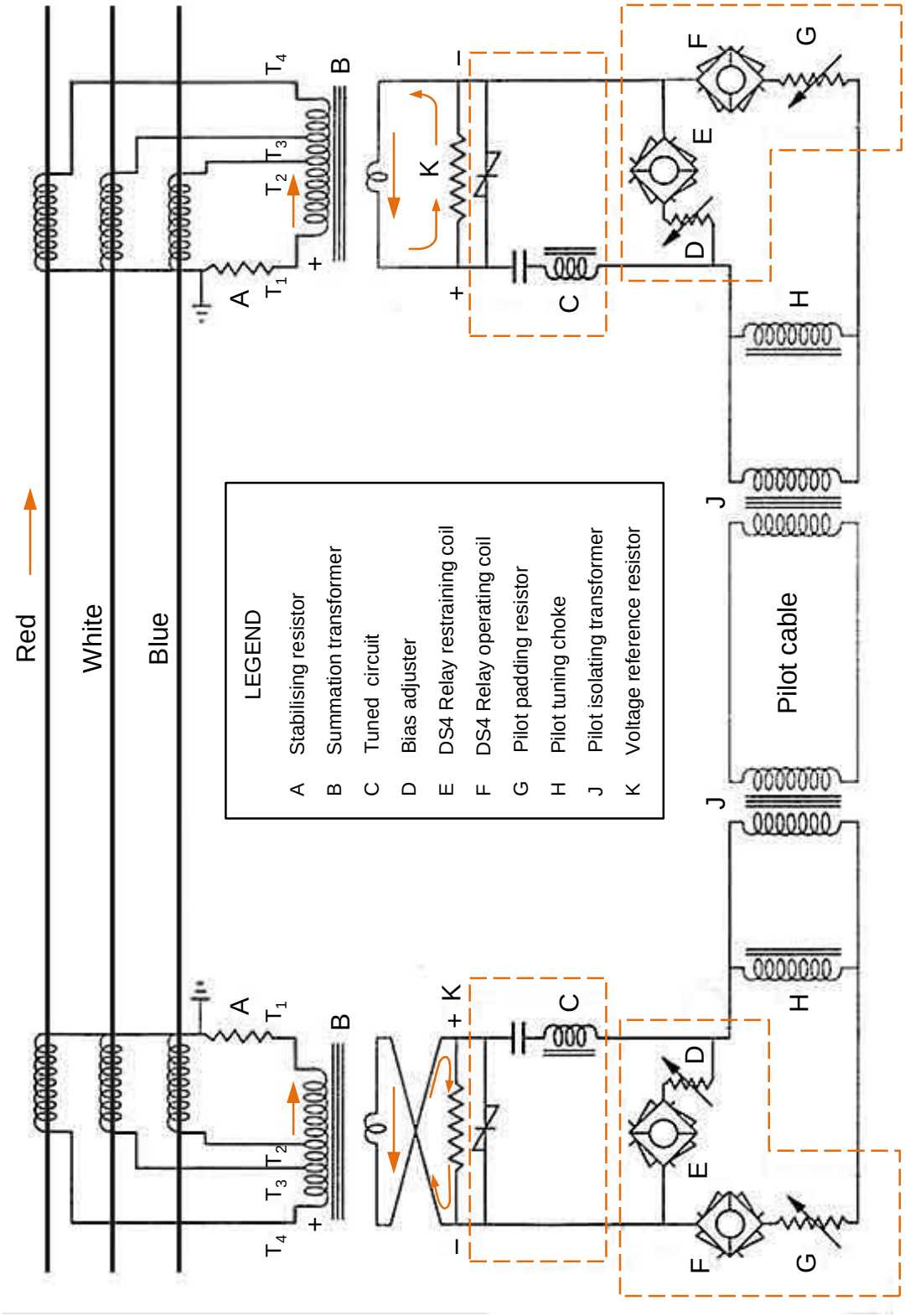

Figure 16-7 Typical pilot protection

16.2.3 Digital Differential Unit Protection

Digital differential line protection relays at each end of the line determines digital values to represent the current flowing at that point on the line. These digital values are communicated to the relay at the opposite end for comparison.

Where the local and remote digital values are the same indicates a healthy power line, however where the digital values differ this would indicate a fault and the circuit breakers at each end are tripped by the local relay.

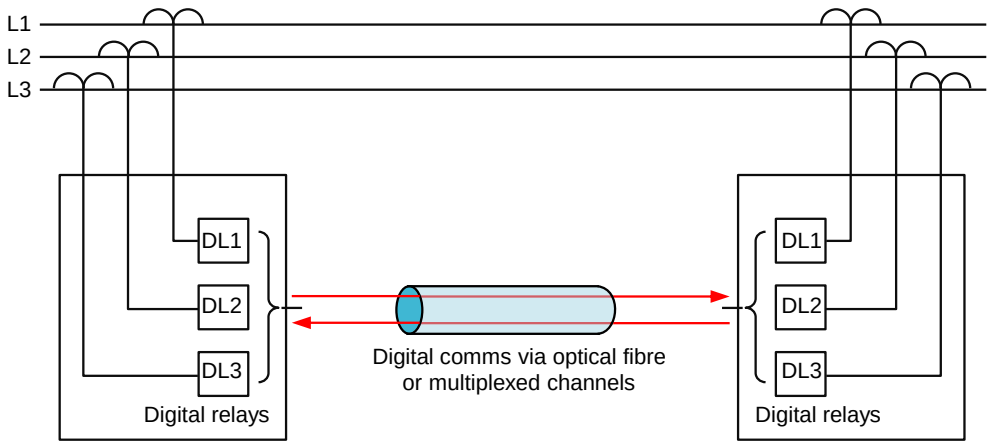

Figure 16-8 Line protection using digital differential communications via optical fibre or multiplexed channels

16.2.4 Phase Comparison Carrier

Another form of unit protection is phase comparison carrier protection in which the phase angle of the current at each end of the line is compared.

The communications channel is the line itself. A high frequency signal is injected across two phases of the transmission circuit at one end and received at the other. The arrangements for signal injection are shown in Figure 16-9.

The wave traps (parallel resonant circuits) are designed to present a very high resistance at the signal frequency (several hundred KHz) and negligible resistance at power frequency (50Hz). With this arrangement at each end, the signal is restricted to the line and cannot pass into other circuits.

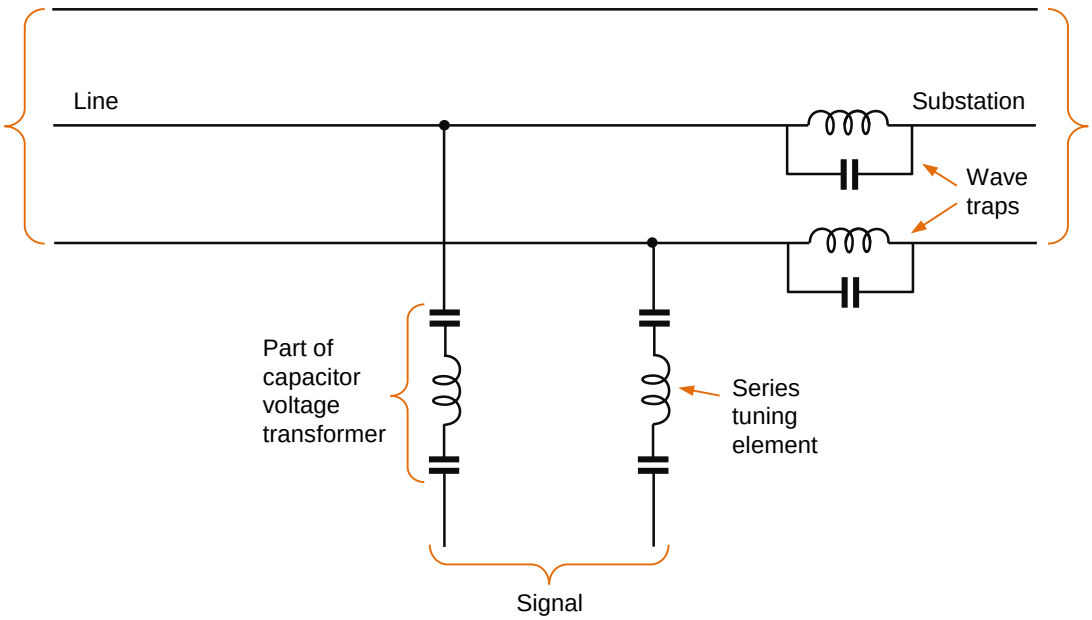

Figure 16-9 Phase comparison carrier protection

A simplified carrier protection arrangement is shown in Figure 16-10.

The transmitted and received signal blocks are approximately 180 degrees out of phase. This is due to the End A and End B apparatus being identical while the primary current is being exported at one end and imported at the other.

For this condition, the protection is stable. The continuous signal (obtained by superimposing the blocks upon each other) 'holds off' the trip function. For a fault condition, the current at the import End B reverses to feed the fault. The blocks of signal would be in phase with End A. When superimposed, gaps of approximately 180 degrees are left.

These gaps initiate tripping. The angle of gaps (for which tripping occurs) varies, a 30 degree setting being typical. The time to trip is in the order of 3 to 4 cycles.

Carrier protection does not, however, compare ends continuously.
It must be 'started' by the output from a starting network. The three-phase load conditions are monitored via current transformers.

The secondary currents produce an output from the starting network. This is initiated by a sudden increase in load, high load or unbalanced phase currents. Such conditions prompt only the comparison of ends. The equipment stabilises if the conditions are due to a through fault.

Usually, carrier protection arrangements have a self-testing feature, for example, a clock starting every 30 minutes or 12 hours, depending on the type of protection.

If one end of a carrier system fails and locks out, the system becomes unstable for through faults or high currents.

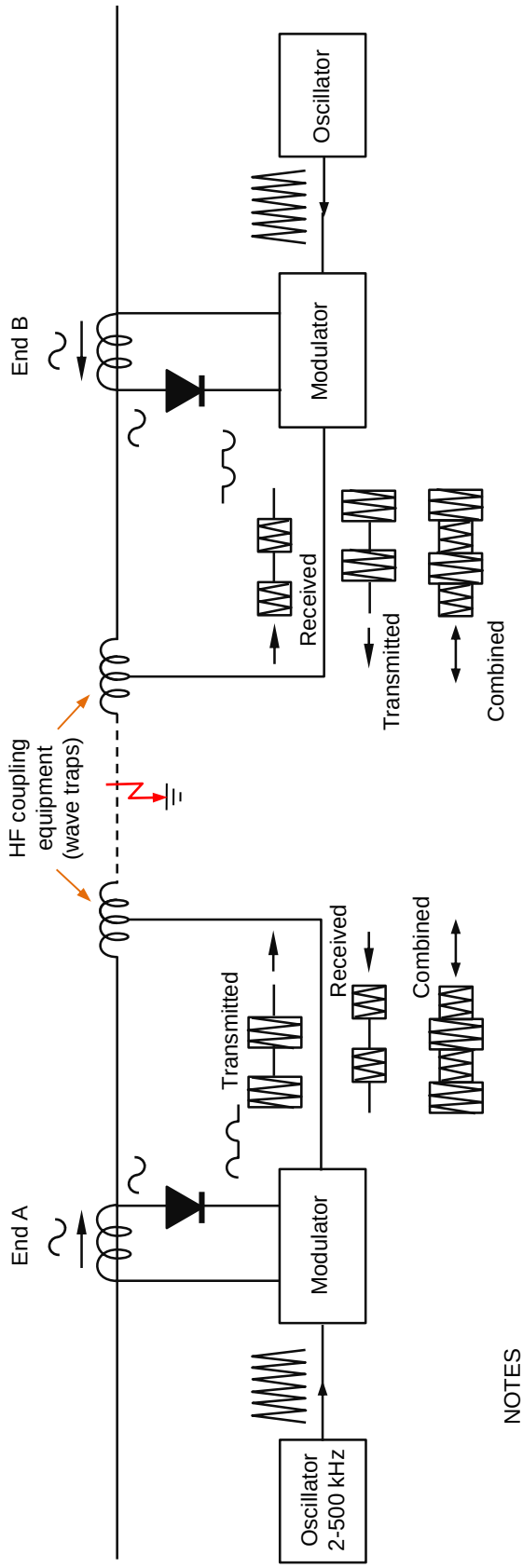

NOTES

1. Oscillator produces continuous carrier signal.
2. 50 Hz load modulates or chops the signal into blocks.
3. Blocks are transmitted and received at both ends.
4. Transmitted and received blocks are superimposed and produce a continuous carrier signal again.
5. The continuous signal 'holds off' the tripping operation.

Figure 16-10 Carrier protection – Internal fault

16.3 Non-Unit Protection

Non-unit protection is time graded. It is arranged so that the protection within the faulted zone operates first and removes the fault, thus allowing protection in other zones to reset before completing their tripping function.

This contrasts with unit protection which will not operate for a fault outside its zone. Examples of non-unit protection include fuses, overcurrent and distance relays, reclosers, and sectionalisers. A fault on a fused spur near the end of a distribution line results in fault current flowing through an overcurrent relay at the zone substation feeder circuit breaker, reclosers, sectionalisers and the fuse protection on the spur.

The fault current activates overcurrent relays for the circuit breaker and reclosers. It also operates the counter of the sectionalisers and heats up the fuse element. If the scheme is correctly graded, the fuse melts and clears the fault first, allowing all other protection devices to reset.

16.3.1 Distance Protection

This non-unit protection consists of circuits that measure and compare the voltages and currents at the relaying point. It is able to determine the location of the fault from these values. It generally only responds to faults in one direction. Details of distance protection follow. They include the following aspects:

- voltage
- current
- operation
- grading
- switched versus full schemes
- measuring elements
- close-on fault
- communication channel.

Voltage

Figure 16-11 shows that the voltage measured at the substation equals the voltage drop along the line to the fault. The fault is assumed to be a solid fault which reduces the voltage to zero at that point (a reasonable assumption for most fault conditions).

The voltage drop obeys Ohm's Law, that is V = IR or, in this case, IZ where Z is the impedance (resistance plus reactance) of the line.

Figure 16-11 shows that the voltage measured by the distance protection at the substation is higher for the fault at location B than for a fault at location A, that is, V2 is larger than V1.

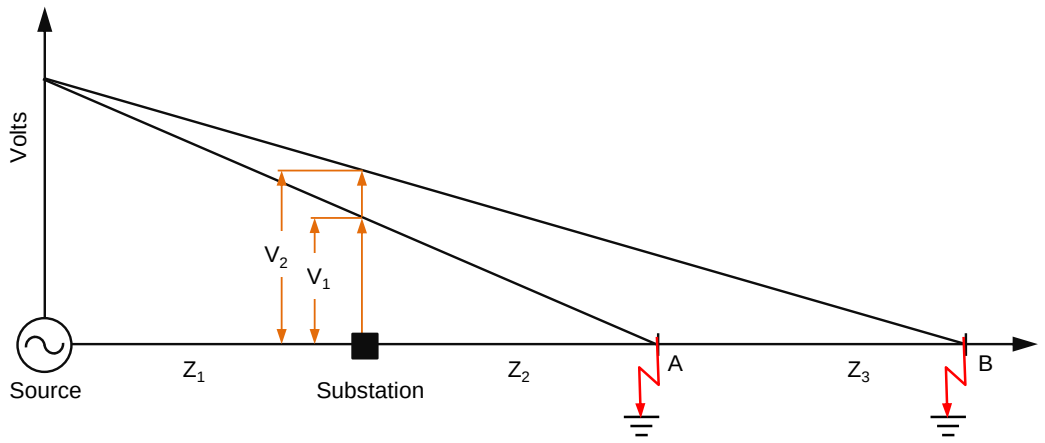

Figure 16-11 Voltage distance protection

Current

Figure 16-12 shows that the current measured at the substation varies inversely with the distance along the line to the fault. The nearer the fault is, the lower is the impedance of the line to the fault. Consequently, the higher will be the fault current.

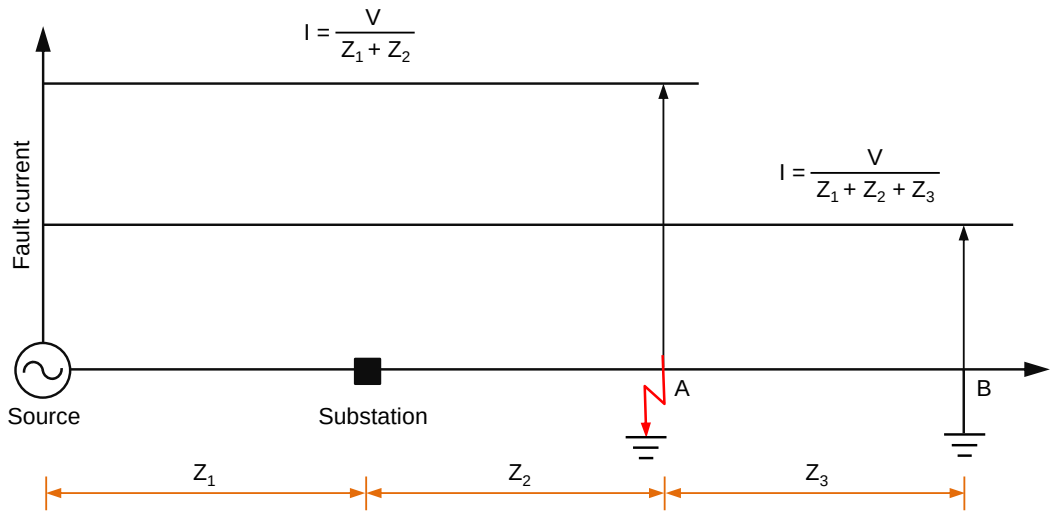

Figure 16-12 Current distance protection

Figure 16-11 and Figure 16-12 show that if the fault location is moved nearer to the substation, the voltage decreases and the current increases.

Operation

A simple element monitoring these quantities should now be considered (see Figure 16-13 below).

The solenoid closes the trip contact. Operation is opposed by the applied voltage, occurring only when the current effect overcomes the voltage effect.

It has been already shown that the current increases and voltage decreases as the distance to the fault is reduced. This means that settings for voltage and current can be established for which the relay will operate.

Since Ohm's Law states:

$$\frac{V}{I} = Z$$

then the relay can be considered to have an impedance setting. It will not operate for faults involving a higher impedance, that is, for faults that are more distant. Hence, it may be considered to operate at a distance setting called the 'reach' of the relay.

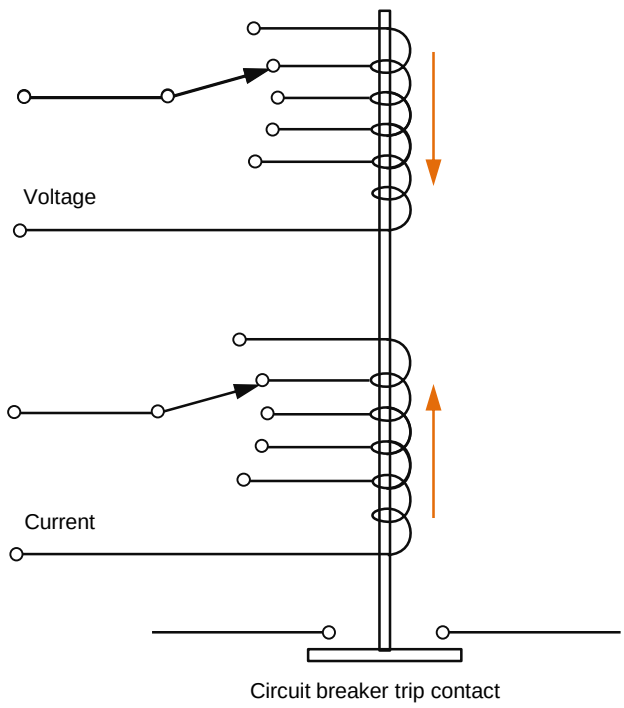

Figure 16-13 Distance protection
(Current coil initiating trip and voltage coil opposing)

Grading

After a suitable time delay, the relay reach can be extended, enabling a second, delayed tripping zone to be covered. Further delays and extensions of reaches usually are available. Some relays are restricted to two zones, while others have five available. Typical distance protection uses three zones. Most distance protection arrangements are set for this. Figure 16-14 shows the zone/distance/time arrangement for one location only.

The local voltage and current compared in a distance protection change very gradually with the location of the fault. Therefore, a precise end to the relay reach is not possible. The ideal setting (to cover the whole of the protected line) cannot be adopted because of the danger of 'over reaching'.

A 20% safety factor is applied, hence the protection has a zone 1 (high speed trip) reach of 80% of the protected line. A second safety factor means that zone 2 covers only 120% of the first section of line (see note) and zone 3 covers 90% of Line 1 plus Line 2.

Note A blanket rule regarding settings cannot be applied. The above settings are typical only.

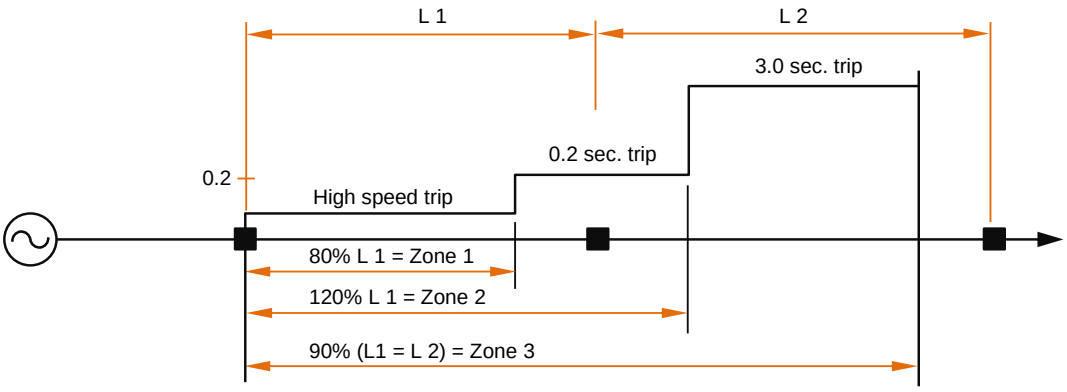

Figure 16-14 Distance protection grading

If several distance protections are located in series at substations on the same radial feed, the zone of adjacent relays overlaps. This provides a ‘backup’ trip, should the circuit breaker (nearest the fault) fail to trip.

In Figure 16-15 below, the fault shown between substations B and C should produce a high speed zone 1 clearance by the relay c at substation B. If the fault is not cleared, the relay at substation A will time out (typically at 0.3 seconds) and trip zone 2, providing the fault is within the zone 2 reach of the relay at A.

The hazard of overreaching becomes obvious here. The relay at substation A could operate if its zone 1 reach extended just beyond substation B, hence, there is the 20% underreach safety margin referred to earlier.

If the circuit is a ring, the directional feature ensures that only the protection facing (looking towards) the fault could operate the trip.

Some distance protection systems have starters which indicate the faulted phase. A separate element operates to trip the circuit breaker, indicating that the tripping element has operated. In the series situation shown in Figure 16-15, all relays 'seeing' the fault may indicate the faulted phase or phases, even though the tripping is restricted to only one or two relays. Other protection systems do not indicate faulted phases or zones unless they actually perform the trip function.

Switched Versus Full Schemes

Some distance protection arrangements have only one measuring device. The fault to be measured may be any phase to earth or phase to phase combination, hence, the particular voltage and current values to be measured need to be switched to the measuring element. This is termed a 'switched' scheme. The disadvantage of such arrangements is the introduction of a time delay before measuring takes place.

However, other arrangements have varying numbers of elements. By increasing the number of measuring elements, switching is reduced and reliability and speed are increased. If each type of fault is catered for, that is,

R-E W-E B-E R-W W-B B-R,

six elements are required. When this is extended to three zones, 18 elements are required. This arrangement is classified as a 'full' scheme, in contrast with the 'switched' scheme described earlier.

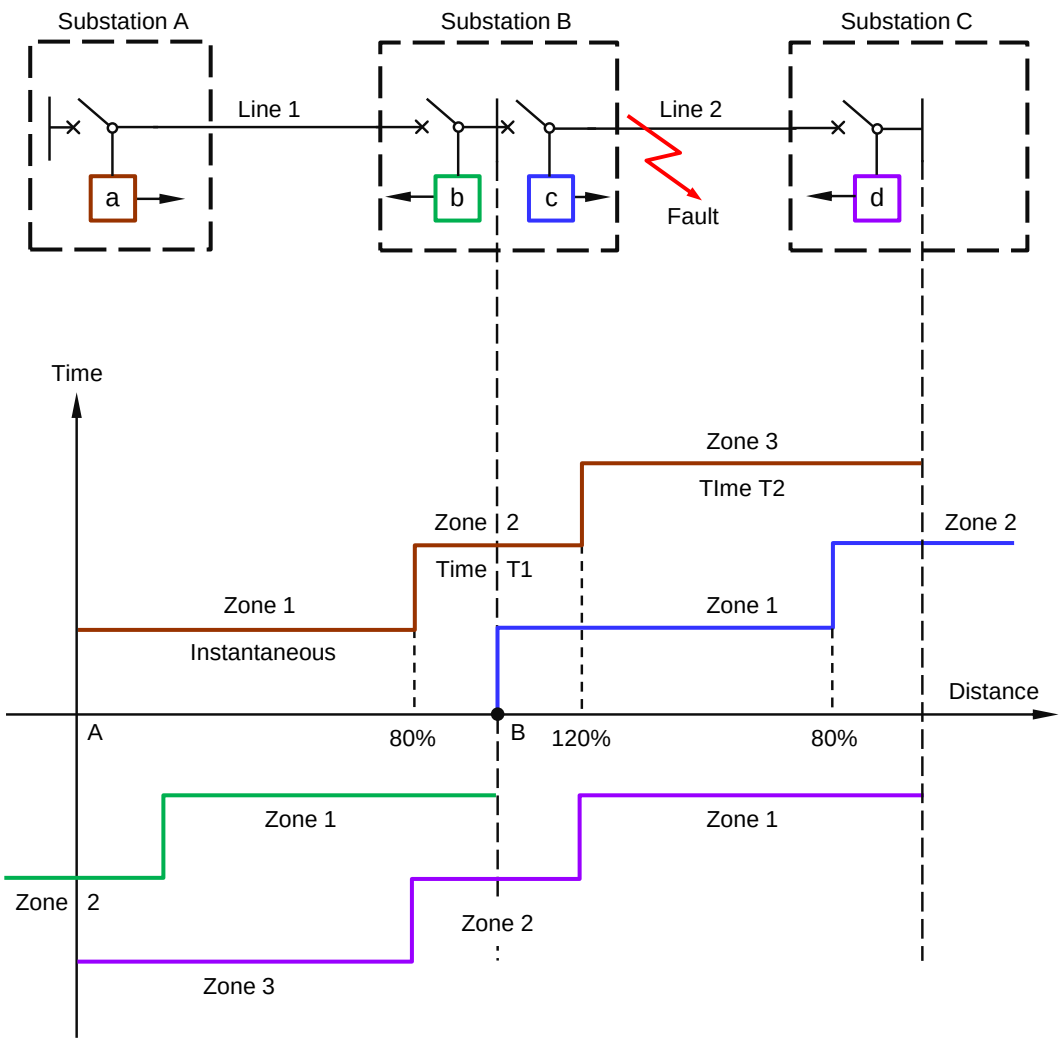

Figure 16-15 Typical stepped time/distance characteristic

Measuring Elements

Figure 16-16 shows a simple impedance relay characteristic. The circle is the limit of the relay reach. The relay located at A operates whenever the impedance value of the line and fault place the fault within the circle. As the operating circle is centred on the axis, it is non-directional.

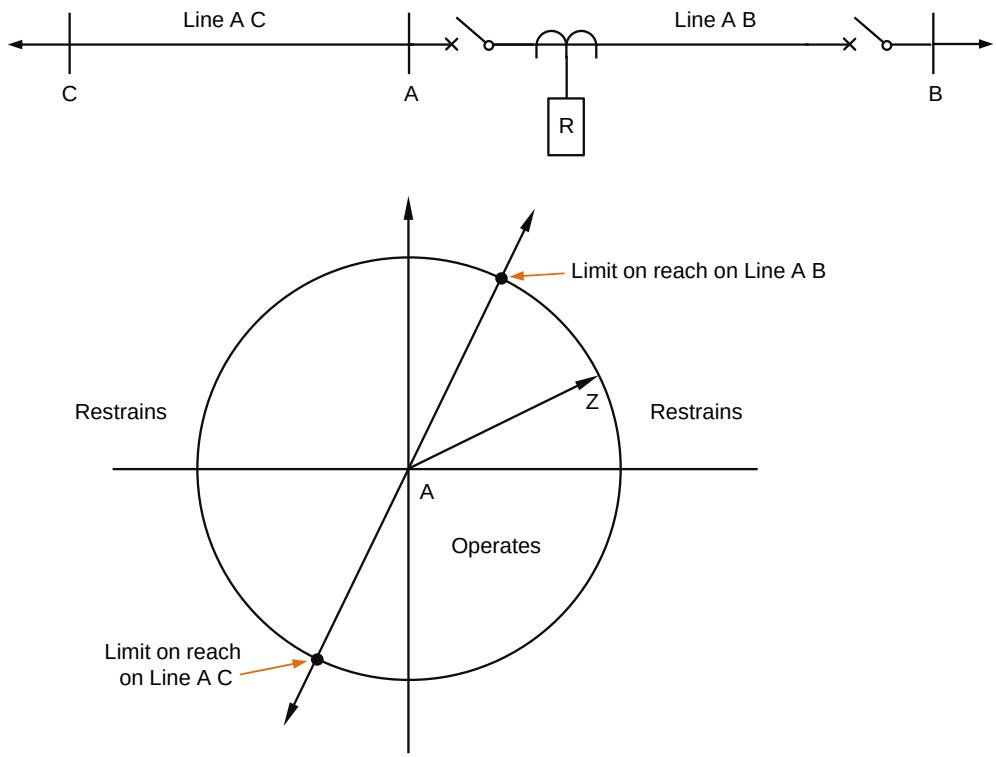

Figure 16-16 Simple impedance relay characteristics

The most common form of distance protection has a Mho relay characteristic as shown in Figure 16-17.

The Mho relay is inherently directional, operating only for faults in the forward direction.

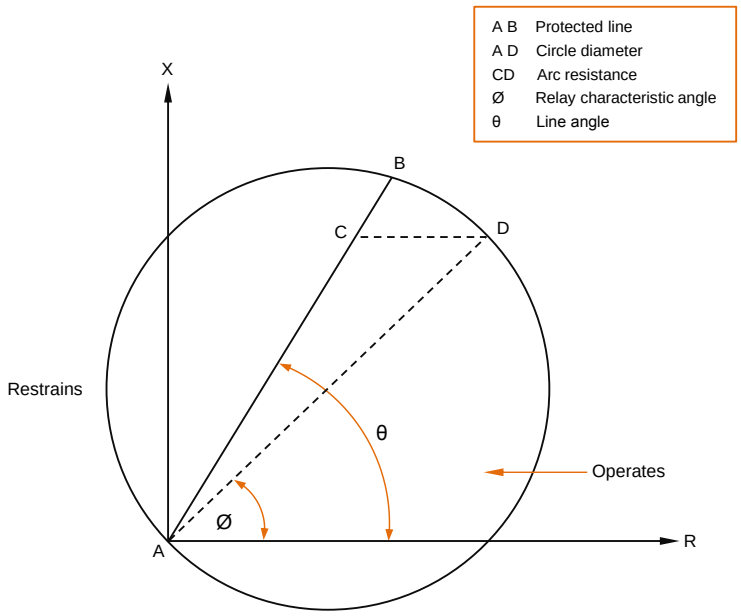

Figure 16-17 Mho relay characteristic

In summary, the characteristics of the impedance relay are non-directional. If used as a starting relay, it must be coupled with measuring units which incorporate the directional feature.

Close-On Fault

This fault is sometimes called a ‘switch on to fault’, ‘line check’ or ‘trip-on-close’. An example is where a set of earths are applied to the primary conductors of the protected line but not removed prior to energisation.

Although fault current flows, a voltage will not be produced for directioning and measuring to take place. To overcome this, some protection arrangements function purely as overcurrent relays for the first 30 milliseconds (ms). to provide an instantaneous trip for 'close-on' faults.

With Communication Channel

Because of inaccuracies in relay operation, zone 1 cannot be set to cover the whole length of the line without risking loss of discrimination with other protection devices. Figure 16-18 shows that only the middle 80% of the line is covered by high speed zone 1 operation at both ends of the line, the remainder being covered in zone 2 time from one end.

While this arrangement may satisfy some applications, a major transmission system may require faults to be cleared in 100-160 milliseconds to ensure stability and limit damage. To achieve this over the whole line length, some form of protection signalling must be used between the protection located at each end of the line.

The protection signalling allows the distance protection to operate like a high speed unit protection, however, it takes no part in fault detection or measurement. A description of the most frequently used forms of protection signalling follow.

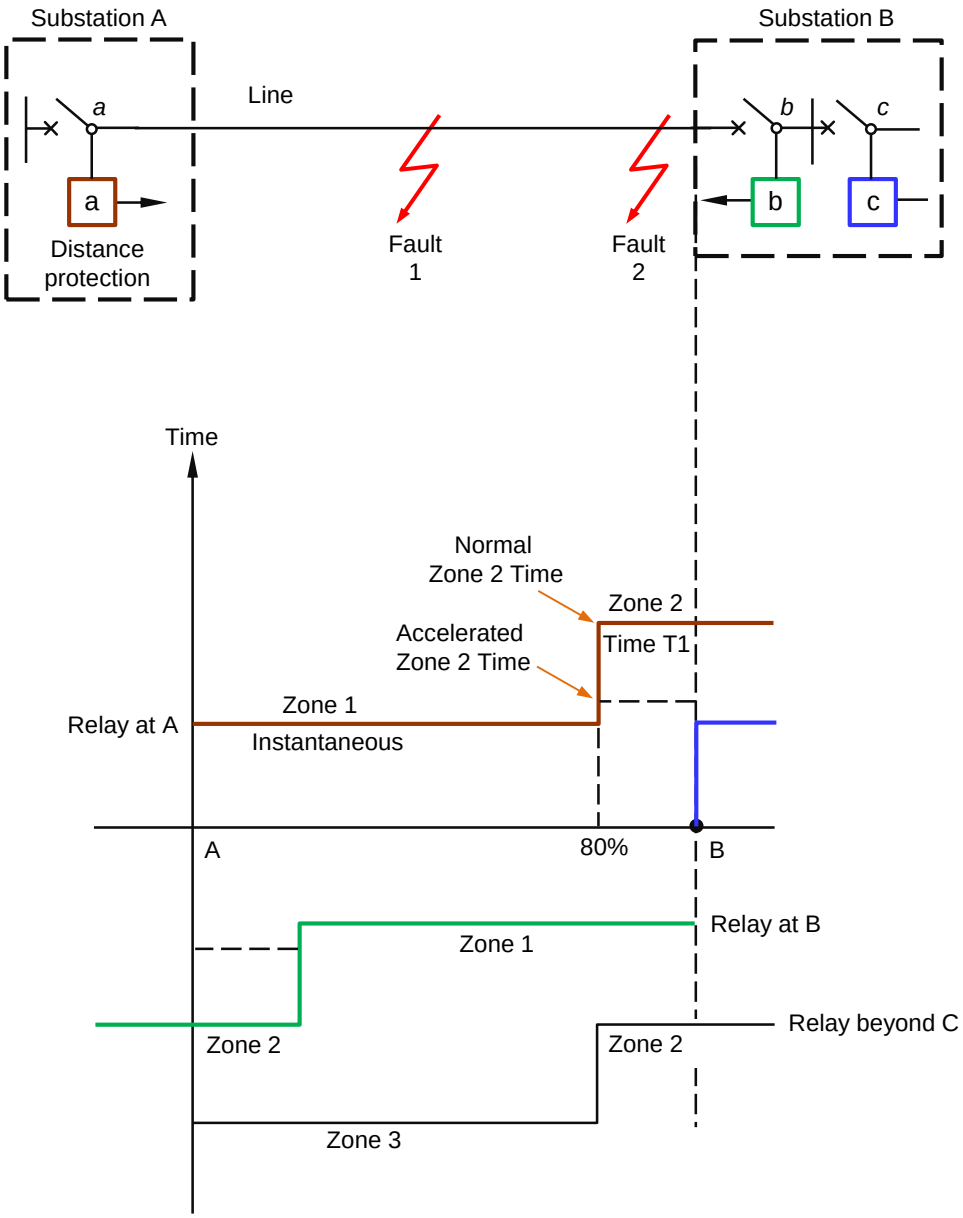

Figure 16-18 Accelerated distance protection

Accelerated Intertripping

A fault on a line which is protected by distance protection at each end is shown in Figure 16-18.

A fault F1 in the centre of the line would be cleared by both ends at high speed (approximately 5 cycles). Both protection 'a' and 'b' 'see' the fault in zone 1.

A fault F2 near substation B, however, would be cleared as follows:

1. protection 'a' starts to measure and time the fault, preparatory to tripping circuit breaker *a* in zone 2 time.

2. protection ‘b’ would also measure the fault, high speed trip circuit breaker *b* in zone 1 time, and initiate a signal to intertrip protection ‘a’.

3. protection ‘a’ will receive an intertrip signal from protection ‘b’. This causes the tripping of circuit breaker *a* without further delay, because protection ‘a’ has already detected the fault in zone 2 (see step 1 above).

The intertripping signal, although initiated by a normal distance protection, is provided by a communications channel. This may be pilot cable, a high frequency carrier signal using the primary conductor as the bearer, or radio (usually microwave).

Direct Intertrip

The zone 1 relay (at the end nearest the fault) is used to send a trip signal to the remote end in order to directly trip the circuit breaker there. In this arrangement, the relay at the receiving end is not used to confirm that there is a fault on the line, therefore, the scheme requires very secure signalling links.

Permissive Intertrip

The zone 1 relay at the end closest to the fault sends a signal to the remote end of the line. However, the circuit breaker at that end is tripped only if the zone 2 or zone 3 element of the receiving relay has operated, indicating the presence of a fault on the line. This is called an ‘underreach’ scheme, as the sending element does not ‘see’ to the end of the line. An ‘overreaching’ scheme is similar, except that it uses the zone 2 elements to send the signal (see Figure 16-19).

Because fast signalling systems are used, the tripping time for both ends of the line will be only slightly different.

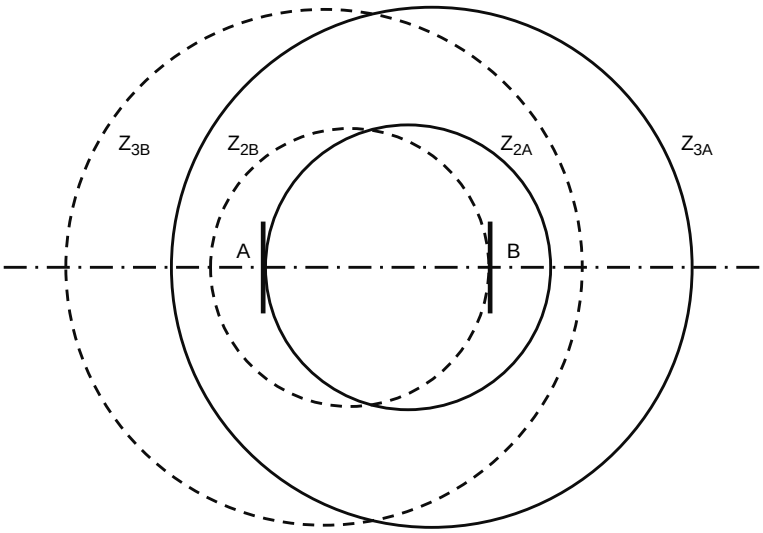

a. Reach characteristics of distance measuring relays

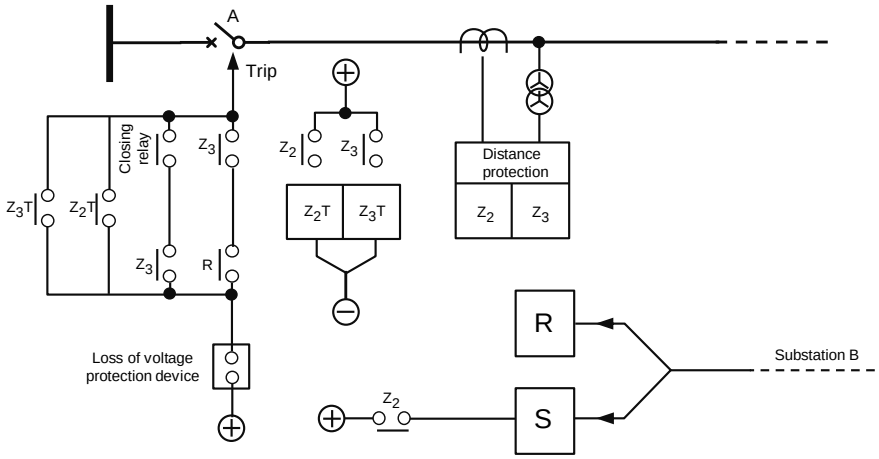

b. Basic DC circuit

Figure 16-19 Permissive type interlocked distance protection

Blocking

The zone 2 relay (at the end furthest from the fault) is allowed to trip with only a small time delay (approximately 50 ms), unless it is blocked by a signal from the remote end (see Figure 16-20).

The signal is sent by an extra, reverse element which 'looks' at the remote end and indicates when a fault is external to the protected line. A short time delay is needed to allow for the transmission time of the blocking signal.

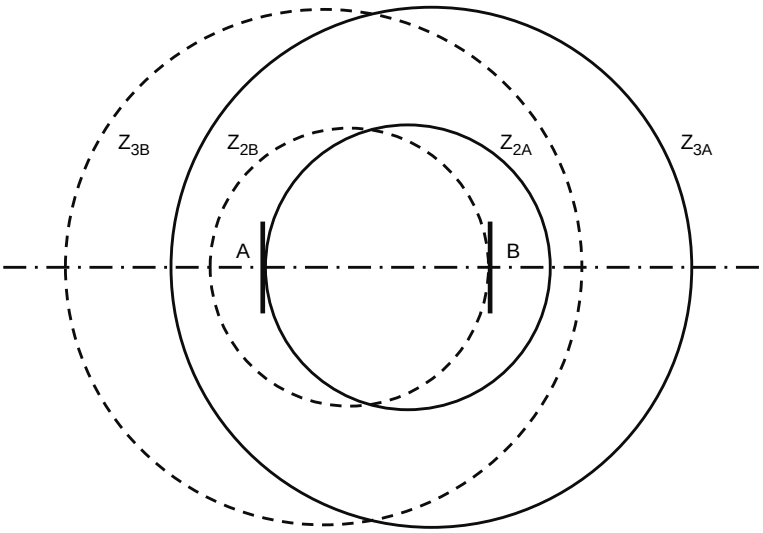

a. Reach characteristics of distance measuring relays

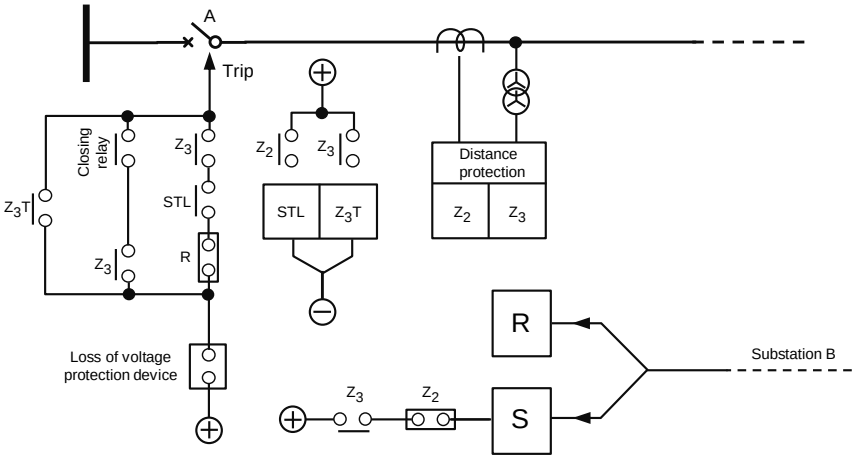

b. Basic DC circuit

Figure 16-20 Blocking type interlocked distance protection

16.3.2 Overcurrent Protection

Overcurrent protection is described in Manual One, Section 7. Overcurrent protection and earth fault protection are applied extensively to protect transmission lines and equipment in zone substations. However, as the speed of operation is relatively slow, often it is used as back-up protection.

For this reason directional overcurrent and earth fault transmission line protection has been largely replaced with other high performance protection schemes. (Directional overcurrent and earth fault protection is still in use on the MDR-GW 66kV line.)

Directional overcurrent and earth fault protection uses currents from circuit CTs and the voltages from VTs. The operation of directional protection is to operate for faults on one side of the CT's location and restrain (not operate) for faults on the other side of the CT location.

Figure 16-21 shows a typical application where the substation has two transmission line circuits A and B, each with directional protection. Protection on circuit B operates for a fault on the transmission line to the right of the substation and protection on circuit A operates for a fault on the transmission line to the left. Therefore for Fault 1, the directional protection on circuit B will operate and circuit A will restrain. Similarly for Fault 2, the directional protection on circuit A will operate and the directional protection on circuit B will restrain.

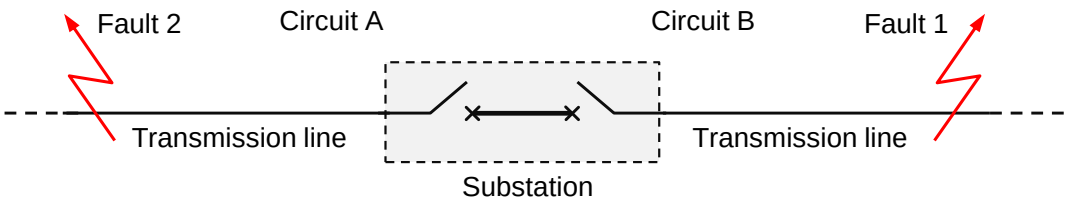

Figure 16-21 Directional protection

16.4 Horizon Power Protection Arrangements

Unlike distribution protection, the correct operation of transmission protection is essential for the interconnected system to remain stable.
If the protection fails to work, and the fault is cleared by back up protection, it is possible for large sections of the interconnected system to be lost.

For this reason, it is standard practice in Horizon Power to duplicate protection schemes on most items of transmission plant.
This duplication includes separate battery supplies, trip relays and trip coils in the circuit breaker.

The two protection arrangements are referred to as No 1 Protection and No 2 Protection, both being equally important but not necessarily the same. The No 2 protection should not be confused with back up protection.

16.4.1 Busbar Protection

Many forms of busbar protection have evolved. Those most commonly used by Horizon Power is circulating current.

Circulating Current

The unit scheme utilising the principles of circulating current have already been described. It is this principle that is most commonly used in busbar protection schemes.

The application of this scheme is shown in Figure 16-22, (a single-phase representation is used for simplicity). All current transformers are connected in parallel with the relay. For fault F1 on circuit D, an assumed primary fault current is shown. The summation of all the current transformer secondary currents results in zero current in the relay, therefore, the busbar protection does not operate. The fault, in this case, is cleared by feeder protection on circuit D.

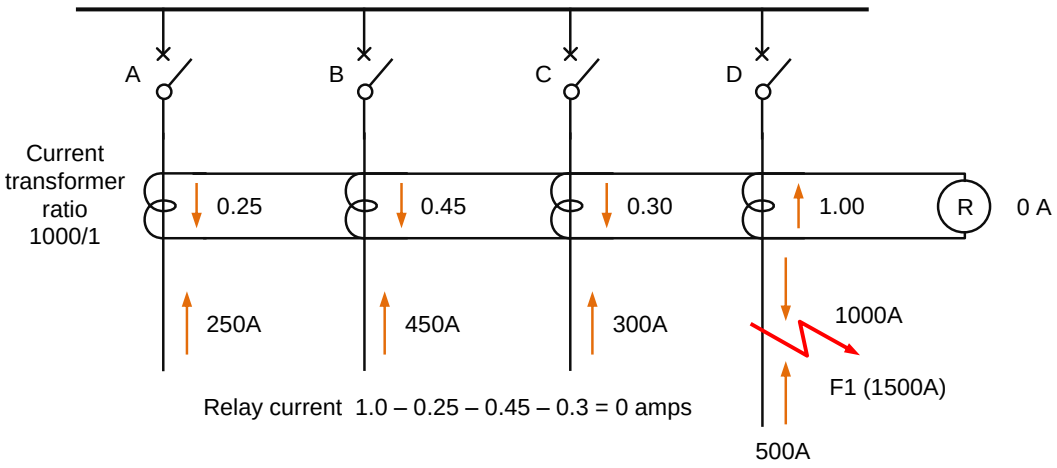

Figure 16-22 Circulating current busbar protection (stabilising on external fault)

The fault on the busbars shown in Figure 16-23 results in the summation of all current transformer currents flowing in the relay. This causes the relay to operate and, consequently, all circuit breakers operate. The simple scheme shown in Figure 16-22 and Figure 16-23 does not employ a check system. A check system may need to be introduced, depending upon the location, i.e. double bus which is susceptible to inadvertent operation.

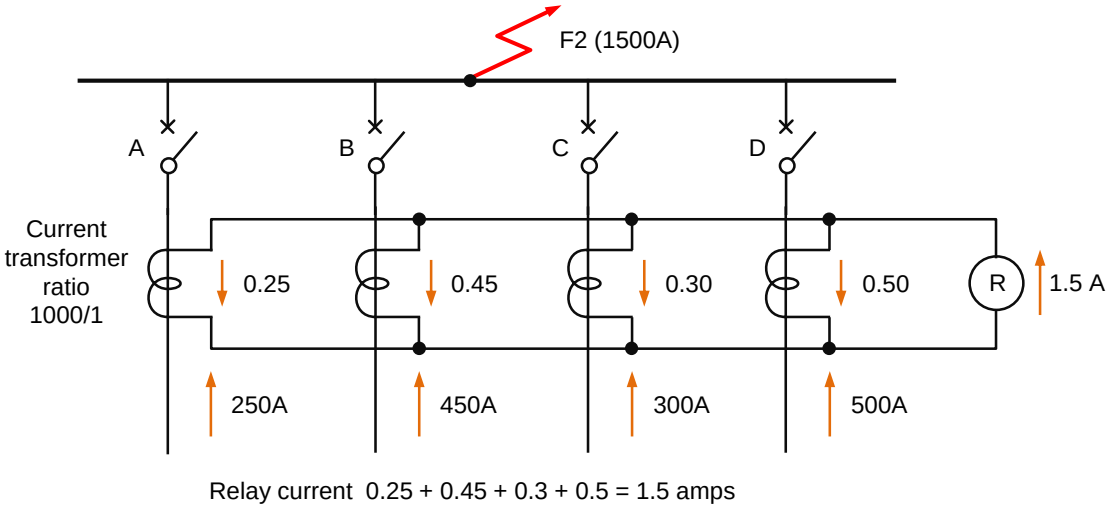

Figure 16-23 Circulating current busbar protection (internal fault)

Current Transformer Location

The position of current transformers in relation to the circuit breakers and busbar is very important. Figure 16-24 below shows the effects of protection performance for a varying fault position in three current transformer locations.

The circuit depicted in Location A shows the current transformers located on each side of the circuit breaker. Fault F1 is a busbar fault which should be cleared by the busbar protection, while fault F2 is clearly a circuit fault cleared by the circuit protection.

Fault F3 is a busbar fault, but both the busbar protection and circuit protection should operate. With unit circuit protection, a fault located at F3 would be accompanied by a clearance of the circuit breaker at the remote end of the circuit.

Fault F4 is a circuit fault. Again, both the circuit and busbar protection should operate, depending on their relative operating times. Other circuit breakers associated with this busbar may have operated unnecessarily.

The circuit depicted in Location B shows the current transformers located in the more conventional manner, that is, on the circuit side of the circuit breaker. Faults F1 and F2 should be correctly cleared, as before. However, fault F3 will cause the busbar protection only to operate, as it is outside the circuit protection zone. Although the fault is cleared from the local busbar, it still can be back fed via the circuit. If the circuit is a line and the remote end is fitted with distance protection, clearance of the remote end of the line should be accomplished in its zone 2 clearance time.

If the clearance time is considered too long for stability of the system then an intertripping scheme is adopted. However, if the line is protected by unit protection,

the remote circuit breaker will not operate. That is, the protection remains stable. The protection trip relay contact of the operated local busbar protection is utilised to de-stabilise the line protection. This is achieved by de-stabilising a pilot protection scheme (short or open circuit pilots) or by muting a phase comparison scheme.

If the circuit in Figure 16-24 below is a transformer circuit, the busbar protection trip relay can be used to trip the circuit breaker on the other side of the transformer to prevent back feed.

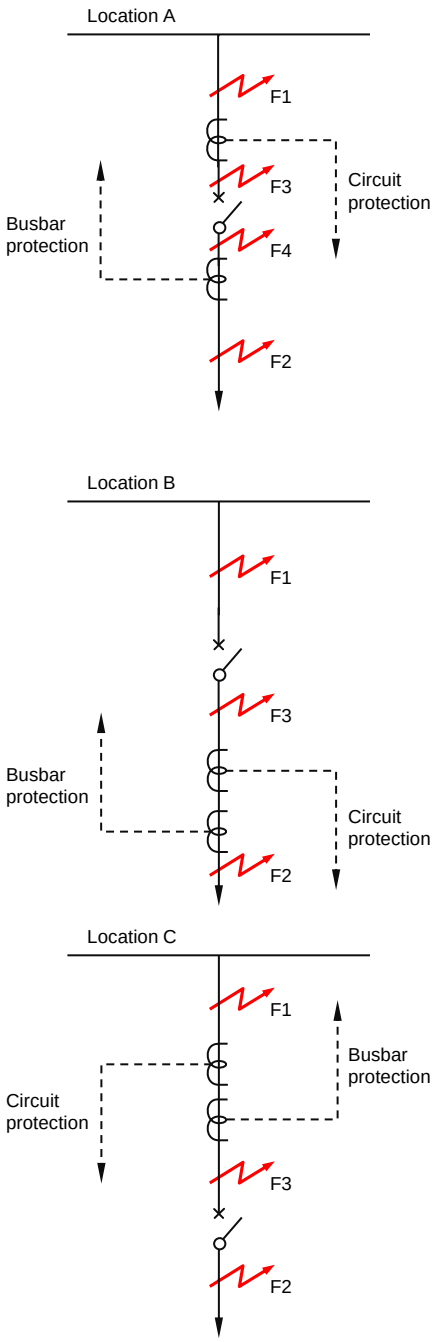

Figure 16-24 Current transformer location busbar protection

The circuit depicted in Location C shows the current transformer located on the busbar side. Faults F1 and F2 will be correctly cleared. However, faults at F3 will not be seen by the busbar protection, as it is outside the zone of protection. In this case, circuit protection is used to initiate local back up protection which trips the bus zone and totally clears the fault. This location of the current transformers is not generally used for this reason, as busbar faults at F3 have an associated delayed clearance time and the fault level from bus faults is generally much higher than the fault level from the remote end.

16.4.2 Overhead Line Protection

Two independent protection systems are also employed on transmission lines. However, the stability of the system may well be at risk if certain 220kV, 132kV, or 66kV faults are allowed to persist for too long, therefore, it is important that protection systems operate as quickly as possible under these circumstances. In general, a protection operating time not greater than 4-5 cycles is required, (80 to 100 ms).

These operating times are possible on 220kV and 132kV lines by using:

- current differential protection, e.g. pilot wire protection or digital differential systems
- carrier protection
- distance protection operating with or without high speed intertripping, and
- interlocked distance protection.

In addition to high speed protection, Inverse Definite Minimum Time (IDMT) earth fault relays are provided. These relays detect low magnitude faults below the sensitivity, or outside the reach, of the main protection arrangements.

On 66kV lines, system stability is generally not such a problem and critical clearance times are usually greater. Protection systems therefore need not be so sophisticated.

The choice here includes:

- current differential protection, e.g. pilot wire protection or digital differential systems
- distance protection, and
- directional earth fault as back up protection.

16.4.3 Transformer Protection

The transformer is one of the most important links in a transmission system. However, its great range of characteristics and special features makes complete protection difficult.

The choice of suitable protection for transformers also is governed by cost, as the ratings required in transmission, and distribution systems, range from a few kVA to several hundred MVA. Fuses are used for the lower rated transformers. Higher ratings, however, require the best protection that can be designed.

The principles adopted in transformer protection include the following:

- overheating protection
- overcurrent protection
- earth fault protection (restricted and standby)
- biased differential protection
- gas detection protection, and
- overfluxing protection (large transformers or where a risk of over flux exists).

Overheating Protection

The rating of a transformer is based on the temperature rise above an assumed maximum air temperature. An oil temperature of about 95°C is considered to be the maximum working value beyond which a further rise of 8-10°C will have a detrimental effect on the transformers insulation. It will lower the life of a transformer, if sustained.

Large transformers have oil and/or winding temperature detection devices. Both direct (oil) and indirect (winding) methods of temperature measurement may be employed, or a combination of both. Generally, these devices are fitted as shown in Figure 16-25.

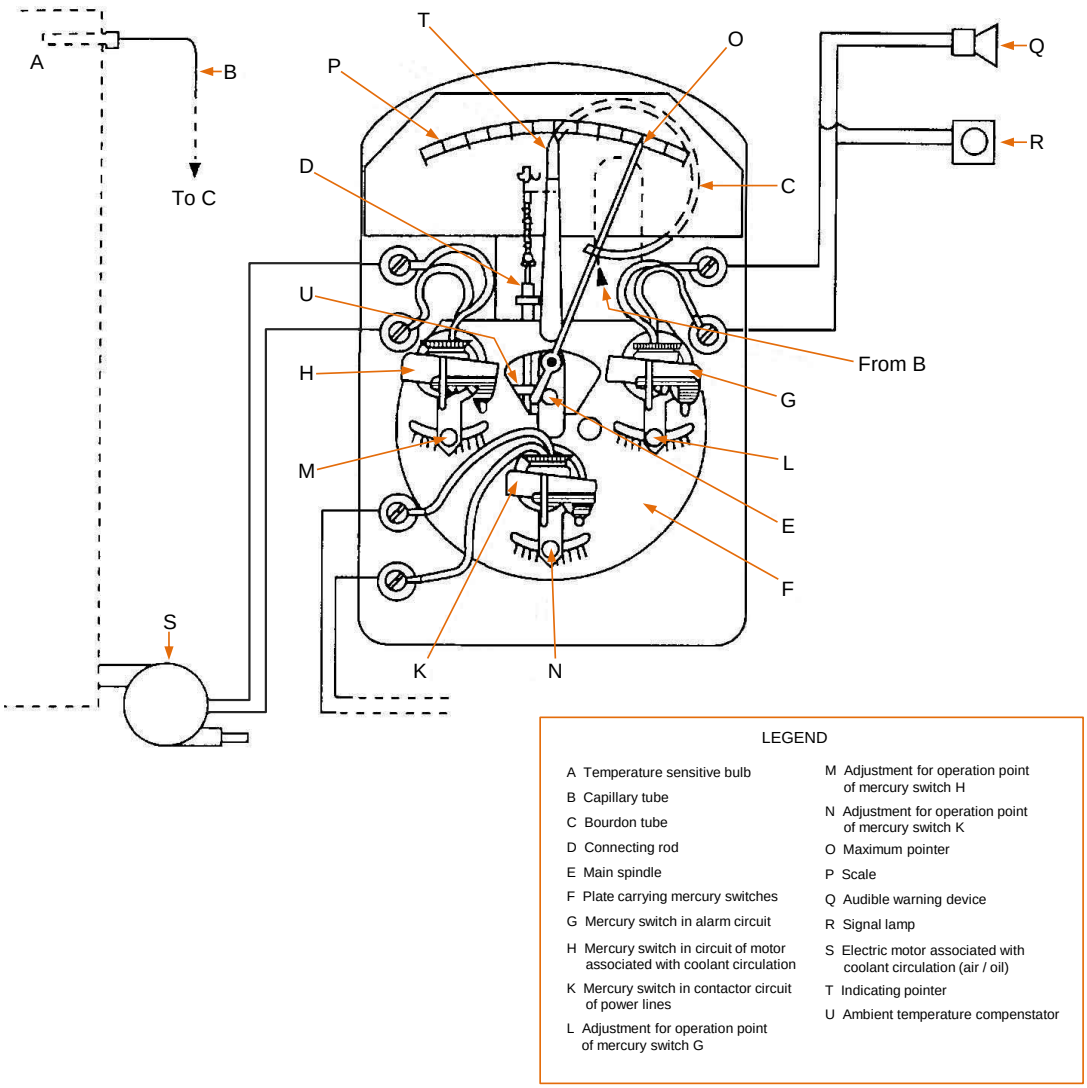

Figure 16-25 Typical instrument for direct measurement of temperatures

The direct method for an instrument measuring oil temperature is shown in Figure 16-25 above. The temperature detecting element comprises a mercury filled steel bulb A. This is connected by a capillary tube B to a Bourdon tube C, which is fixed at one end. Increases in temperature cause expansion in the mercury, resulting in increased pressure in the Bourdon tube. This causes the free end to deflect.

The deflection causes the plate F to rotate. Mounted on this plate are several switches. The position of these switches determines the time and sequence of their operation, that is, how much the plate must rotate to initiate operation. (Older devices use mercury switches, modern transformers have micro switches as they don't operate due to vibrations caused by earthquakes or through faults).

Compensation for changes in air temperature is provided by the shaped bimetallic strip U fitted in the linkage between the Bourdon tube and the metal plate. Pointers T and O indicate the actual temperature of the bulb, as well as the maximum temperature to which it has been subjected. The switches carry out the trip and/or alarm functions.

The same principle may be applied for the indirect method which measures the temperature of a transformer winding. A different type of detecting element is used from the plain bulb shown.

The mercury bulb is surrounded by a heater coil or a heater is included in the instrument. This is fed from a current transformer which reflects the actual current in the transformer winding. If the heater is suitably designed, the instrument can be arranged to measure either the winding average or 'hot spot' temperature. The hot spot temperature is more commonly used. (Note that the hot spot is the hottest spot in the windings caused by local heating.)

Generally, two winding temperature instruments are fitted to the larger power transformer. Each instrument is fitted with up to four switch contacts. The winding temperature instrument is arranged to start cooling fans and pumps, and to give an alarm (120ºC) and trip (130ºC). The oil temperature instrument is also arranged to give an alarm (95ºC) and trip (105ºC), usually the lower voltage circuit breaker.

Table 16-2 shows typical settings for these instruments.

Winding Temperature		**Oil Temperature**	
Instrument 1		Instrument 2	
Coolers	In 90ºC Out 73ºC	Alarm	95ºC
Alarm	120ºC	Trip	105ºC
Trip	130ºC		

Table 16-2 Typical temperature settings

Note In cases where forced cooling is not used, usually only an oil temperature instrument is fitted.

Overcurrent Protection

Protection against excess current was the earliest evolved protection system. From this basic principle, the graded overcurrent system was introduced for fault protection.

Most system disturbances utilising this method are detected with IDMT relays, that is, relays having:

- an inverse characteristic (the larger the fault current, the quicker is the operation), and

- a definite minimum time of operation.

The degree of overcurrent protection provided to a transformer by an IDMT relay is limited. Usually, settings of these relays must be high, that is, 150% to 200%. This is because the relays must not operate for emergency overload conditions, therefore, these relays provide negligible protection for faults inside the transformer tank.

Earth Fault (Restricted)

Generally, the simple overcurrent and earth fault scheme used in a typical line protection application does not give adequate protection to a star connected winding.

The degree of protection is greatly improved by the application of a unit differential earth fault scheme (or restricted earth fault protection). This is shown in Figure 16-26.

This diagram shows a high impedance relay. The protection system is operative for faults within the zone of the current transformers. Virtually complete cover for earth faults is obtained, particularly when the star point is solidly earthed.

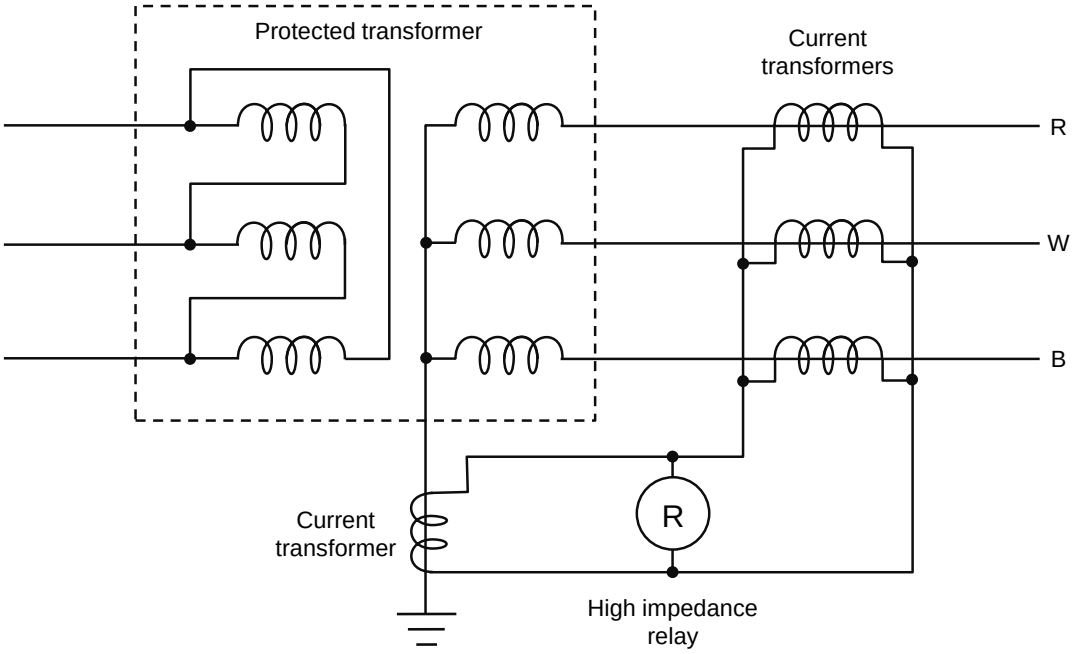

Figure 16-26 Restricted earth fault connection for star connected transformers with neutral solidly or resistance connected earth

Star and delta windings can be protected separately with restricted earth fault protection. This provides high speed protection against earth faults for the whole of the transformer with relatively simple equipment. A typical earth fault protection for delta connected windings is shown in Figure 16-27.

The diagram in Figure 16-27 shows that the restricted earth fault scheme also protects the earthing transformer (an earth reference used to limit earth fault current). The earthing transformer is protected by the main transformers differential and tank overpressure device (Buchholz).

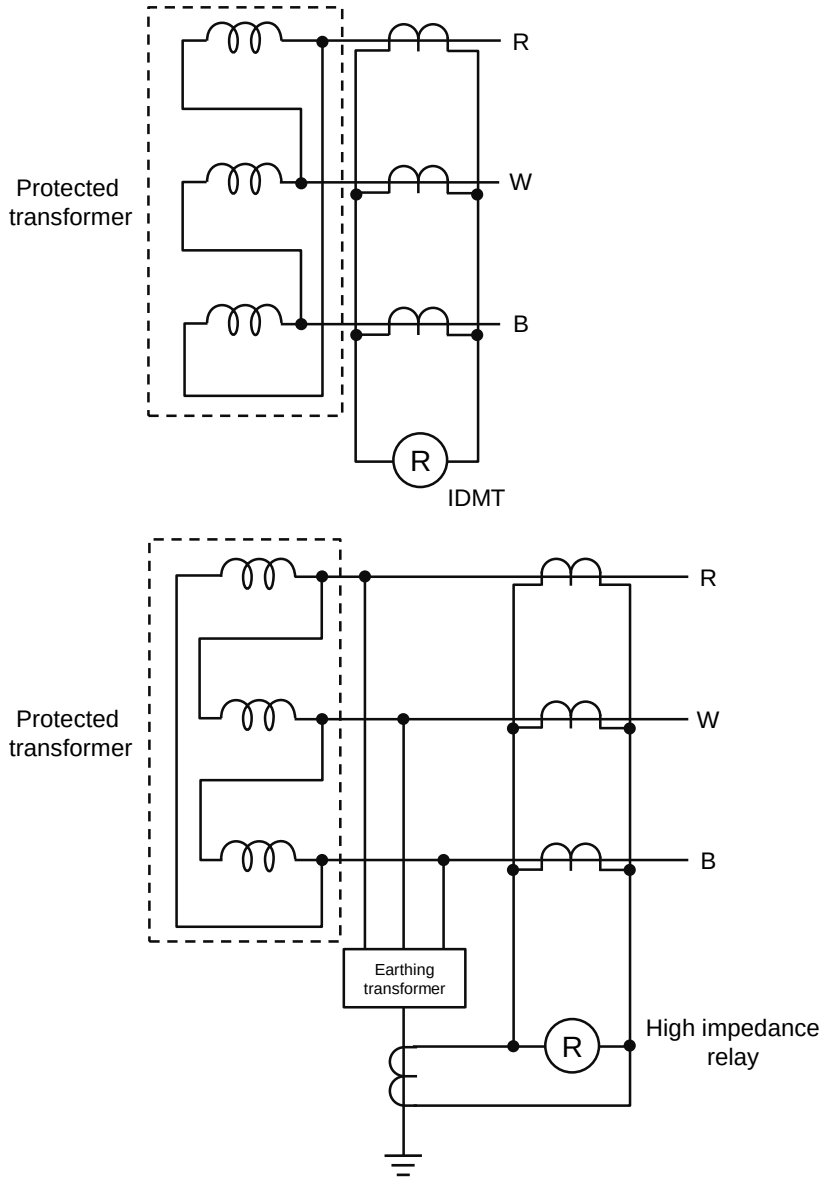

Figure 16-27 Earth fault protection delta connected windings

Differential Protection

Differential protection is designed to cover the complete transformer. This is possible because of the high efficiency of transformer operation and the nearly equal ampere turns developed in the primary and secondary windings. (MVA 'in' approximately equals MVA 'out').

This type of protection scheme compares current quantities flowing into the network with quantities flowing out of the network. The difference between these values is referred to as the 'spill' current available for operation of the protection relay.

The principal causes of the spill current include the following:

- Transformer Ratio

  The rated currents on the primary and secondary sides differ in inverse ratio to the voltages. This difference is overcome mainly by the appropriate selection of current transformer ratios.

- Tap Changing Facility

  If the transformer has a tapping range, the voltage variation must be allowed for in the differential scheme. This is because the current transformers and connections are selected to balance at the nominal tap ratio of the transformer. Any variation in ratio away from the nominal tap position will produce an imbalance proportional to the voltage ratio changes.

  Under certain conditions (particularly out of zone fault conditions), this imbalance current may be sufficient to operate the relay when operation is not required. To offset these spill effects, the protection relay selected usually includes a proportional amount of bias.

- Magnetising Current Inrush

  When a transformer is energised initially, magnetising current is required. The current appears only on the primary side of the transformer, therefore, the whole of the magnetising current appears as an imbalance to the differential protection.

  Since this phenomenon is only transient, stability of protection may be maintained by the use of a second harmonic restraint, being the most widely used to prevent the operation of magnetising inrush current. This is because the waveform produced by inrush currents has a significant amount of second harmonics.

  A typical oscillogram of transformer inrush currents, due to magnetising the transformer core, is shown in Figure 16-28.

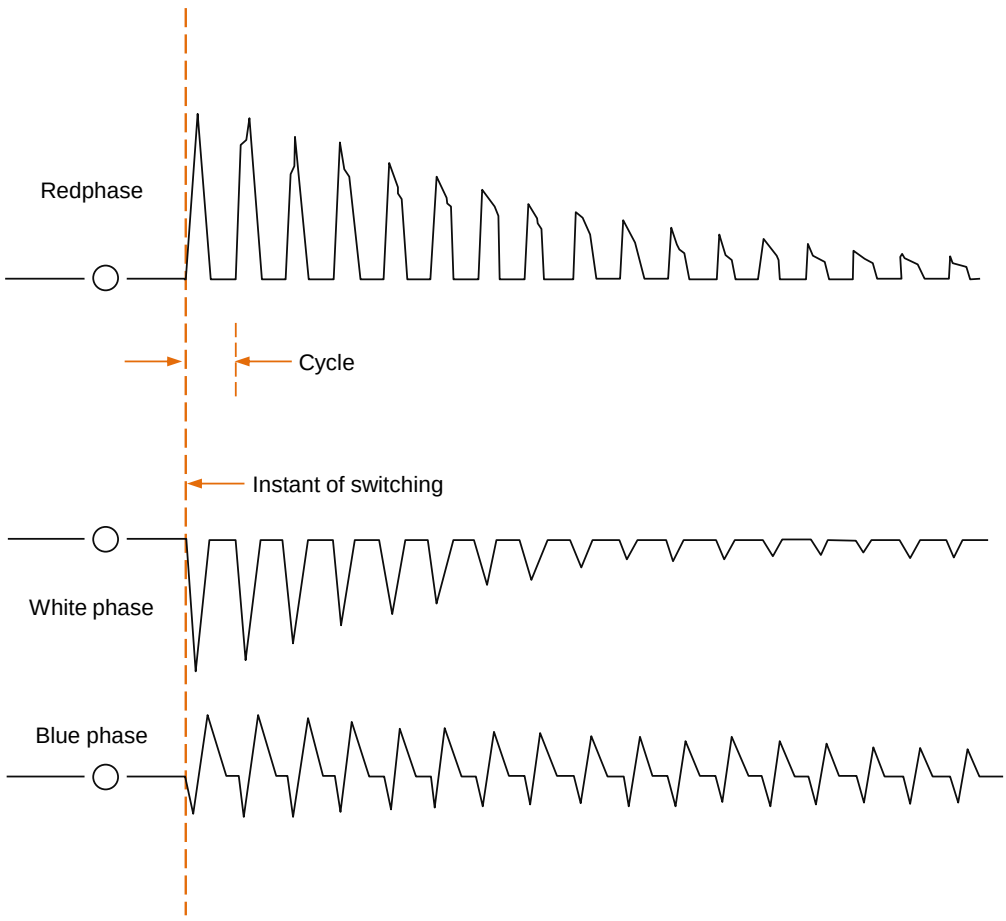

Figure 16-28 Transformer magnetising inrush current typical oscillogram

The initial peak value of the inrush current in any phase depends upon the instant of switching and the residual magnetic condition of the core. The maximum peak values equal up to 8 times the rated current of the transformer.

The basic unbiased scheme applied to a delta/star transformer is shown in Figure 16-29. Balance is obtained by using star connected current transformers on the delta side of the transformer and delta connected current transformers on the star side with the correct ratio.

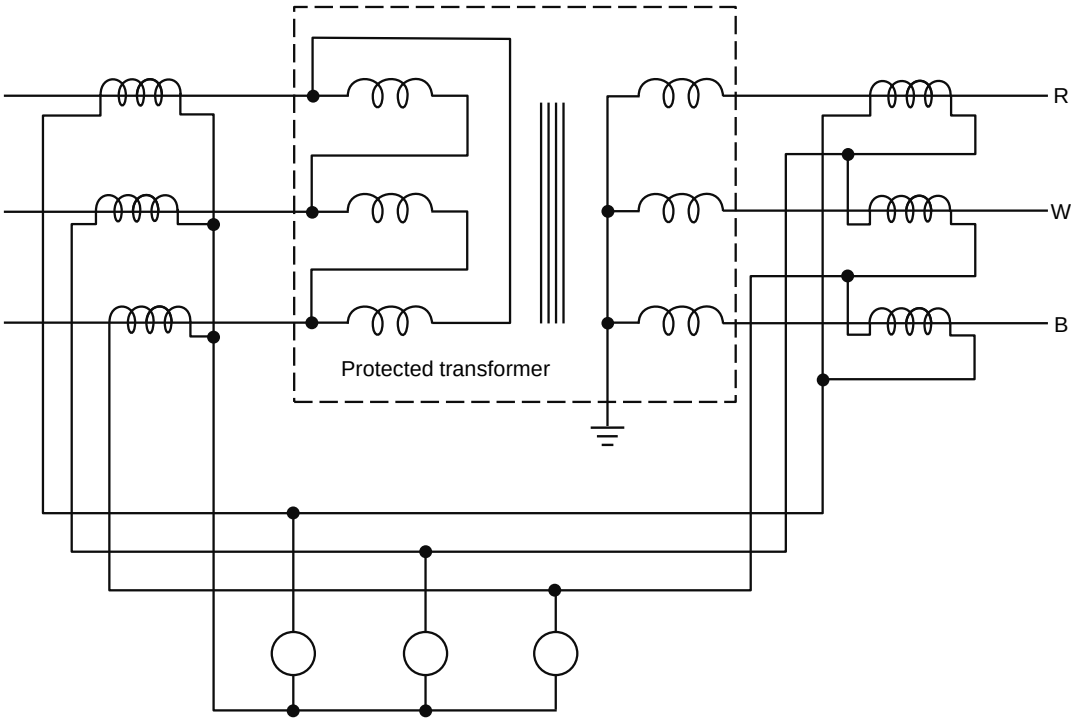

Figure 16-29 Differential protection basic unbiased scheme applied to delta/star transformer

The protection of power transformers with variable ratio (due to on load tap changing equipment) must include a bias feature, if low fault setting and high operating speed are to be obtained. A high speed biased differential relay, incorporating a harmonic restraint, will prevent relay operation for any variance in ratio which is due to tap changing and for the effects of magnetising inrush current.

The basic biased scheme applied to a delta/star transformer is shown in Figure 16-30.

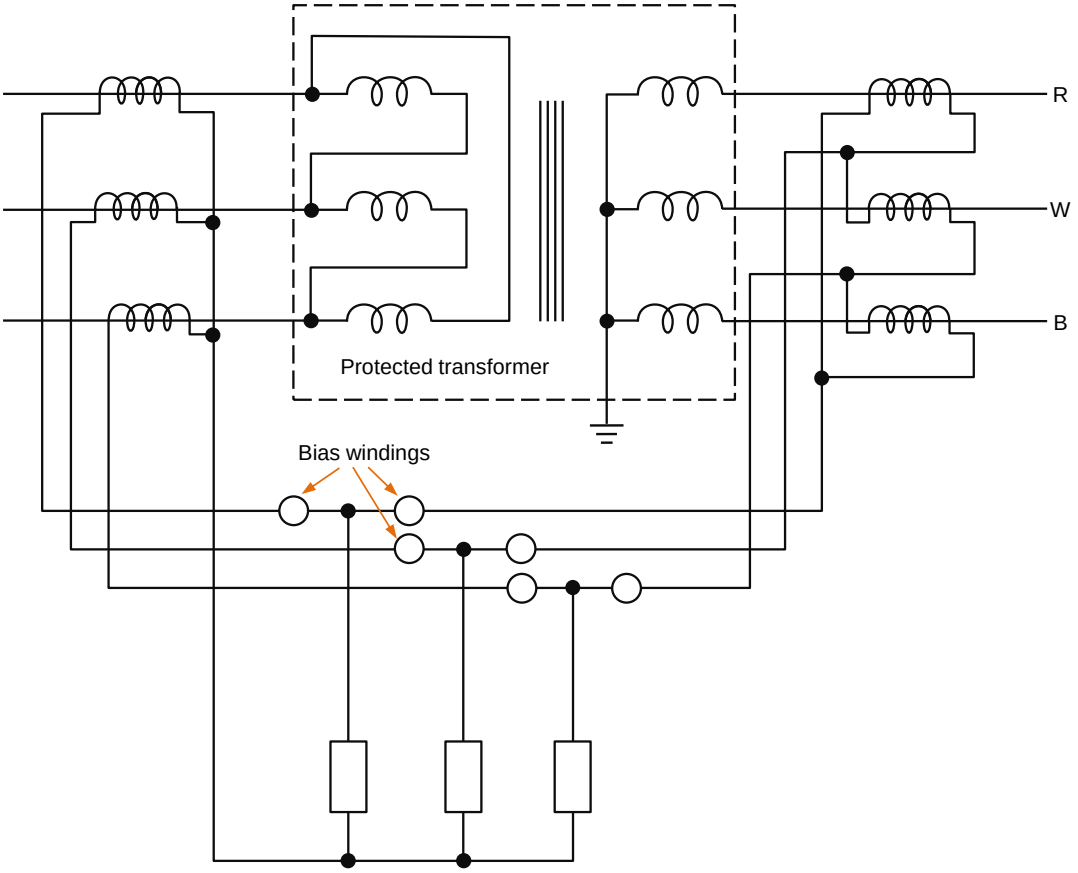

Figure 16-30 Differential protection basic biased scheme applied to delta/star transformer

Gas Detection

Faults inside oil immersed electrical plant (for example, transformers) cause gas to be generated. If the fault is severe, oil movement occurs.

The generation of gas is used as a means of fault detection in the gas/oil operated relay. This comprises one or two hinged vanes, buckets, or similar buoyant masses inserted into the pipework between the oil conservator and the transformer tank. Figure 16-31 shows its general application.

The floats are held in equilibrium by the oil. The rising bubbles (produced by the slow generation of gas due to a minor fault) pass upwards towards the conservator. As they are trapped in the relay chamber, a fall occurs in the level of oil inside the chamber. This results in a movement of the float, closing a pair of contacts in a mercury or reed switch which initiates an alarm.

A heavy fault will produce a rapid generation of gas. This causes violent displacement of the oil which moves the surge float system of the relay. It results in the closing of another pair of contacts (surge contacts) which are used to trip the transformer circuit breakers.

The gas/oil operated Buchholz relay is shown over in Figure 16-32. This relay gives the best possible protection against conditions such as incipient (low level) winding faults, core faults and short circuit situations. The alarm element will operate for loss of oil, as will the trip element if the oil loss continues. This alarm and trip will sometimes operate under cold conditions if conservator oil levels are not maintained.

Analysis of a gas sample collected in a Buchholz chamber frequently may assist diagnosis of the type of fault. The rate of gas generation indicates the severity of the fault.

Tap changer selector switches, mounted separately from the main oil tank, can be provided with a separate oil/gas actuated relay. Alternately, the pipework may be arranged in such a manner that one relay is used for both tanks.

One of the biggest problems associated with older gas/oil actuated protection using mercury switches is vibration (for example, earthquakes, etc.) It may cause mal-operation, however, the problem has been overcome by using reed relays in place of the older type mercury switch.

Transformers are fitted with pressure relief devices to prevent tank rupture in the event of a major internal fault. The old type consisted of a thin diaphragm at the top of a relief vent. The new type is a spring loaded self-resetting diaphragm which also activates a micro switch to trip the transformer.

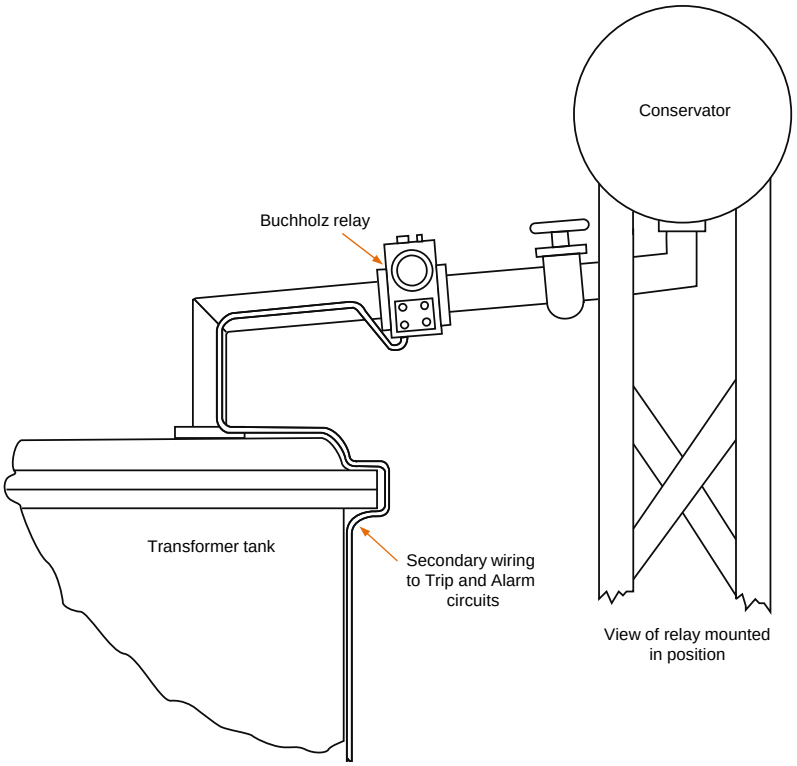

Figure 16-31 Typical location gas detection relay (Buchholz relay)

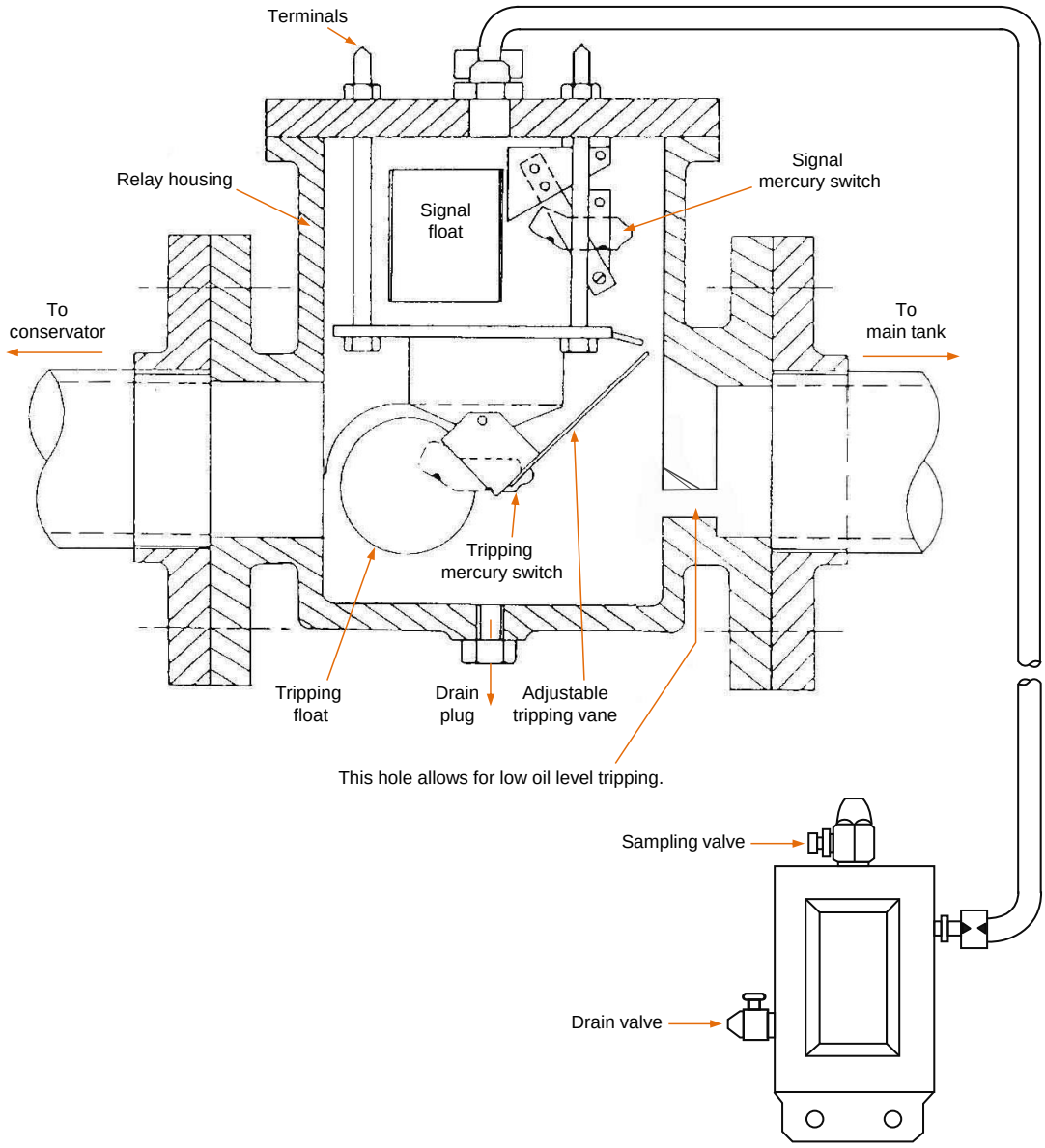

Figure 16-32 Gas detection relay and gas receiver (Buchholz relay)

Overfluxing

Transformer overfluxing is caused by overvoltage and/or a reduction in system frequency.

Overvoltage causes an increase in the flux generated and stress on insulation. The increased flux density causes an increase in iron loss and an increase in magnetising current. Flux is diverted from the laminated core of the transformer into the steel structure. This gives rise, particularly, to the core bolts carrying more flux than their designed limits.

Under these conditions, the core bolts may be rapidly heated to a temperature which destroys the insulation surrounding them. This could damage the core insulation.

Reduction in frequency has the same effect of increasing core flux, therefore, it follows that a transformer can operate with some overvoltage, provided it is accompanied by an increase in frequency. However, the operation must not continue for prolonged periods with high voltage and low frequency conditions.

The ratio of voltage/frequency (V/f) should be less than or equal to 1-1, where the transformer's highest designed operating voltage and nominal system frequency are taken respectively as unity.

Overfluxing protection is used mostly on generator/transformer units. Overfluxing may occur when generators are run up for synchronisation to the system.

16.4.4 Capacitor Protection

Typical capacitor banks consist of two star connected groups connected in parallel. In addition to the normal overcurrent and earth fault protection, capacitor banks have unbalance protection.

This protection is designed so that it will operate for overvoltages on the can elements and raise an alarm. If these overvoltages reach a predetermined limit the protection will trip the bank.

Figure 16-33 shows how unbalance protection is connected between the unearthed neutrals of the two groups.

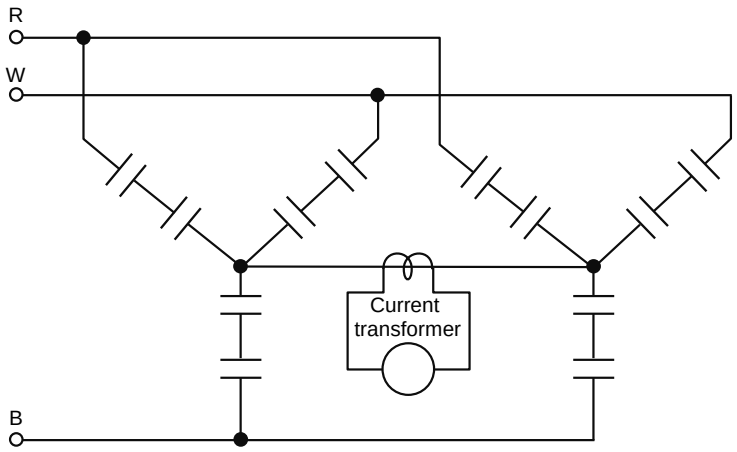

Figure 16-33 Capacitor bank unbalanced protection current transformer location

16.4.5 Reactors

The construction of oil cooled reactors and appearance are similar to transformers, however, the reactor differs from the transformer in that it only has one winding per phase.

16.4.6 Local Back Up Protection

(Circuit Breaker Fail Protection)

Even though a circuit is protected by duplicated protection schemes, it is possible that the circuit still may not trip when required.

To cater for this eventuality, the local back up protection (LBU) is installed. LBU is also used to clear small zone faults where unit protection is used. (See fault F3 in Figure 16-24 below.)

The cause of the original failure to trip could be located in any of the components involved, that is, the protection unit, wiring, or trip mechanism. It may be that the circuit breaker malfunctions. If this is so, a second protection, operating only into the same circuit breaker, serves no purpose.

The function of LBU protection is to clear a fault by tripping the next circuit breaker or circuit breakers in line. The extent of the tripping depends upon the location, however, it can include the whole of a zone substation busbar and intertripping to remote line ends, (see Figure 16-34).

Figure 16-35 shows a typical circuit.

The operation is as follows:

1. the protection trip contact makes and operates the trip relay

2. tripping is initiated and DC is applied to the LBU relay

3. the fault current measured by the LBU relay closes the contact in the LBU time delay circuit

4. the LBU relay starts to time out. If the circuit breaker fails to trip, the fault current will persist

5. the LBU relay times out and the bus zone trip relay is energised.

   This trips

   - both ends of both lines

   - both transformer HV circuit breakers

     (Transformer LV circuit breakers will be intertripped from the respective transformer HV trip relays).

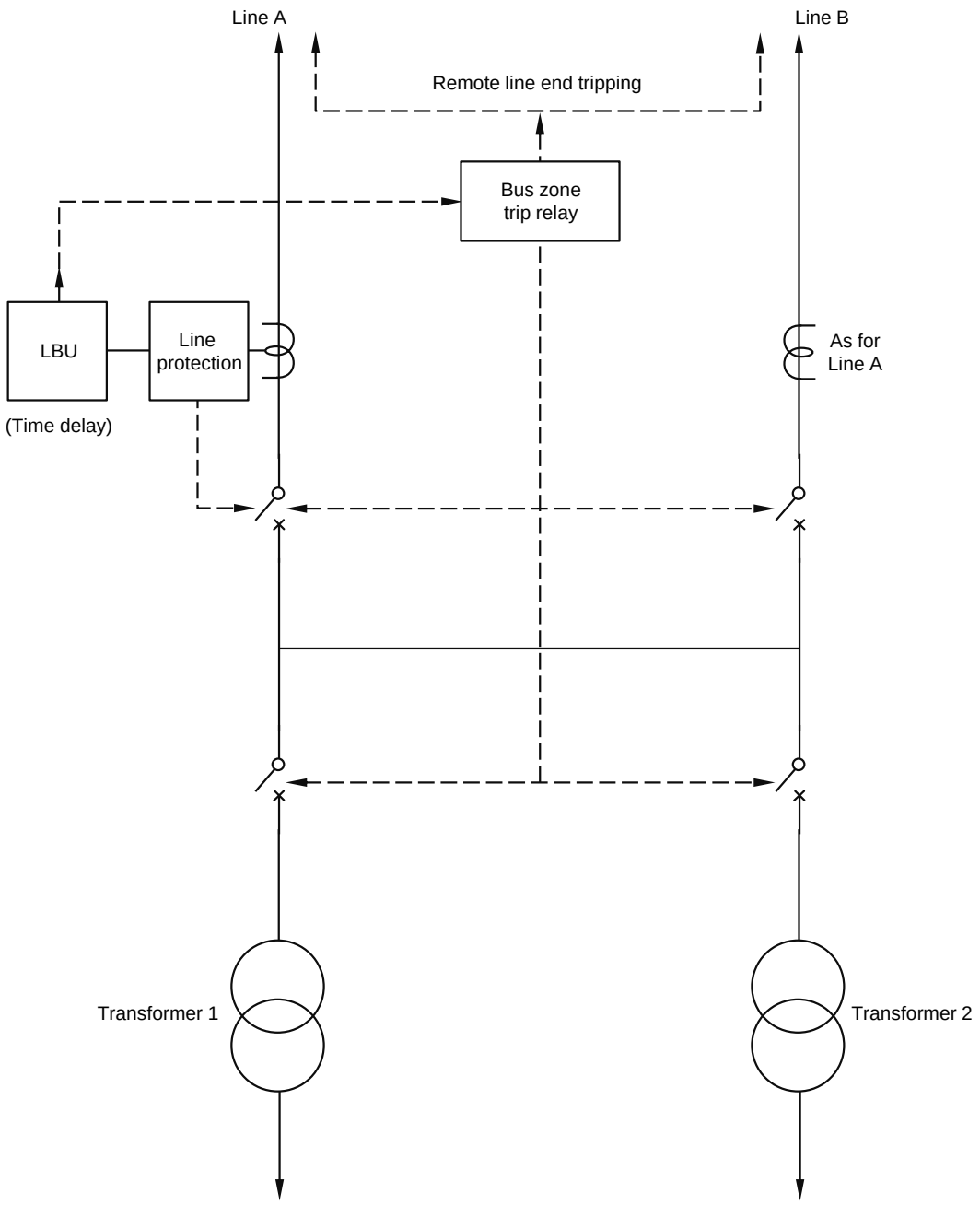

Figure 16-34 Zone substation local back-up protection
tripping local end via bus zone trip relay and remote end via pilot protection destabilising (pilot cable shorting)

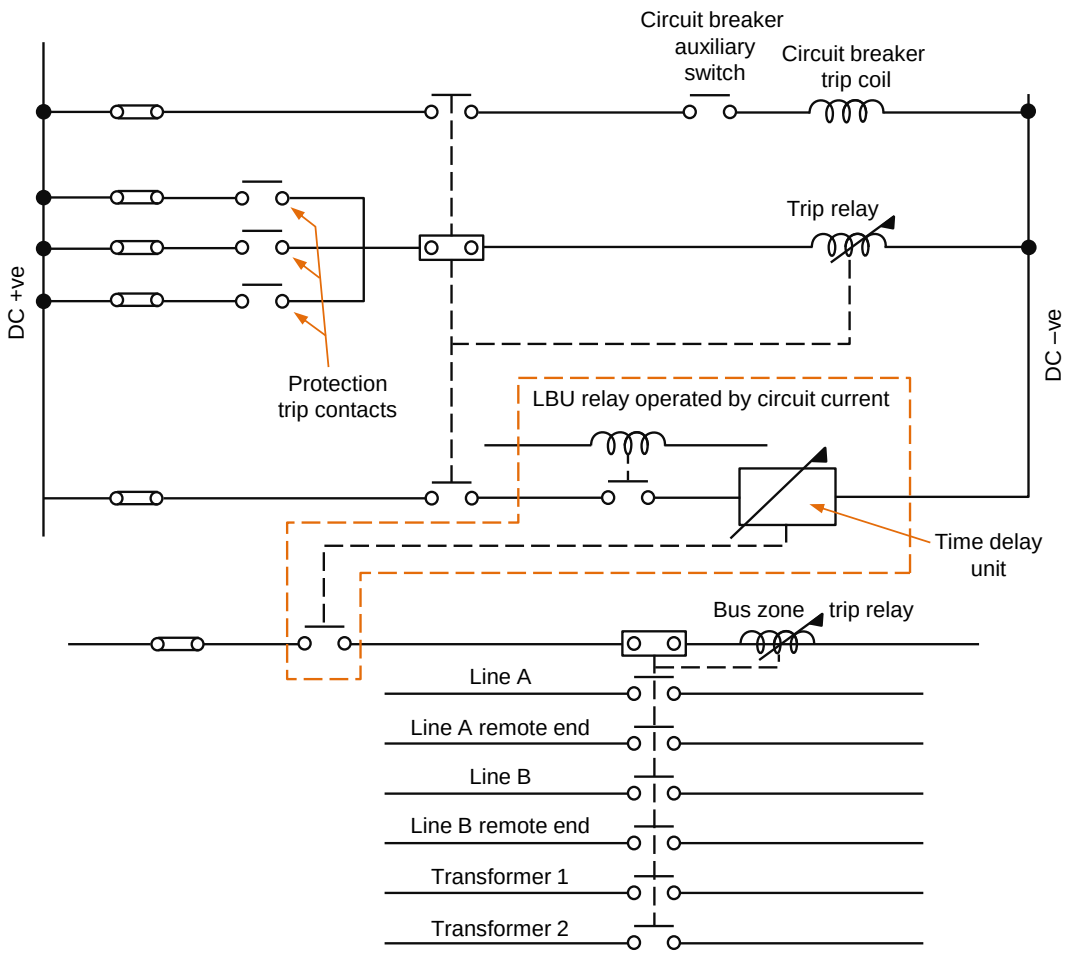

Figure 16-35 Typical circuit local back-up protection

16.4.7 Trip Circuit Supervision

As the name implies, the trip circuit supervision scheme is designed to initiate an alarm when the trip circuit is not functional.

Some circuits still have trip-circuit-healthy circuits, as shown in Figure 16-36 below. When the circuit breaker is closed, the auxiliary contact is closed. The push button lamp resistor circuit then is in parallel with the protection trip contacts. Operating the push button proves that the DC supply and the trip coil auxiliary contact circuits are normal.

The resistor limits the current (in the event that the lamp short circuits) to a level incapable of tripping the circuit breaker.

Failings with this systems include:

- it cannot be used to prove a circuit until it is placed into service (that is not continuously monitoring the circuit)

- it does not produce an alarm (there are no contacts available).

A more satisfactory circuit is shown in Figure 16-37. This system provides for continuous monitoring of the circuit and remote alarms to be initiated.

The points being monitored are:

- the trip coil when the circuit breaker is open
- the trip coil and the normally open auxiliary contact when the circuit breaker is closed
- the DC rails being energised with the circuit breaker open or closed.

Successful tripping still relies upon links 1, 2, 3 and 4, and the respective circuits, being operational. This part of the tripping circuit is not covered by the trip circuit supervision scheme.

Operation

- Circuit Breaker Open

  Coils A and B are both energised via the circuit breaker normally closed auxiliary switch and trip coil. Only coil B is picked up (is more sensitive), holding off the remote alarm.

- Circuit Breaker Closed

  Coil A is energised via the circuit breaker normally open auxiliary switch, holding off the remote alarm. Coil B is de-energised.

A short time delay is built into the relay changeover operation.
This prevents both coils being simultaneously de-energised during the auxiliary contacts operations while circuit breaker switching is being conducted.

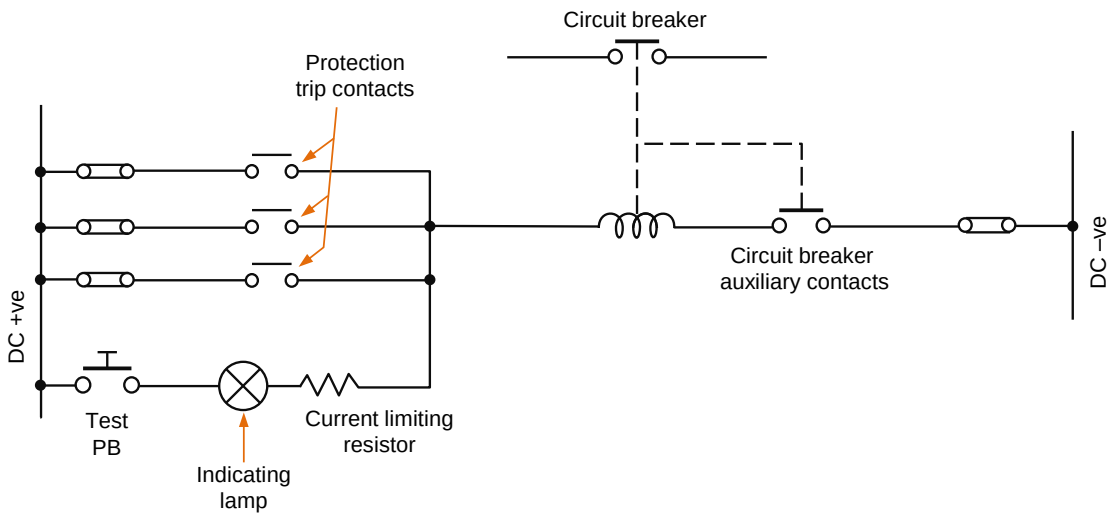

Figure 16-36 Trip circuit healthy scheme
(push button to test)

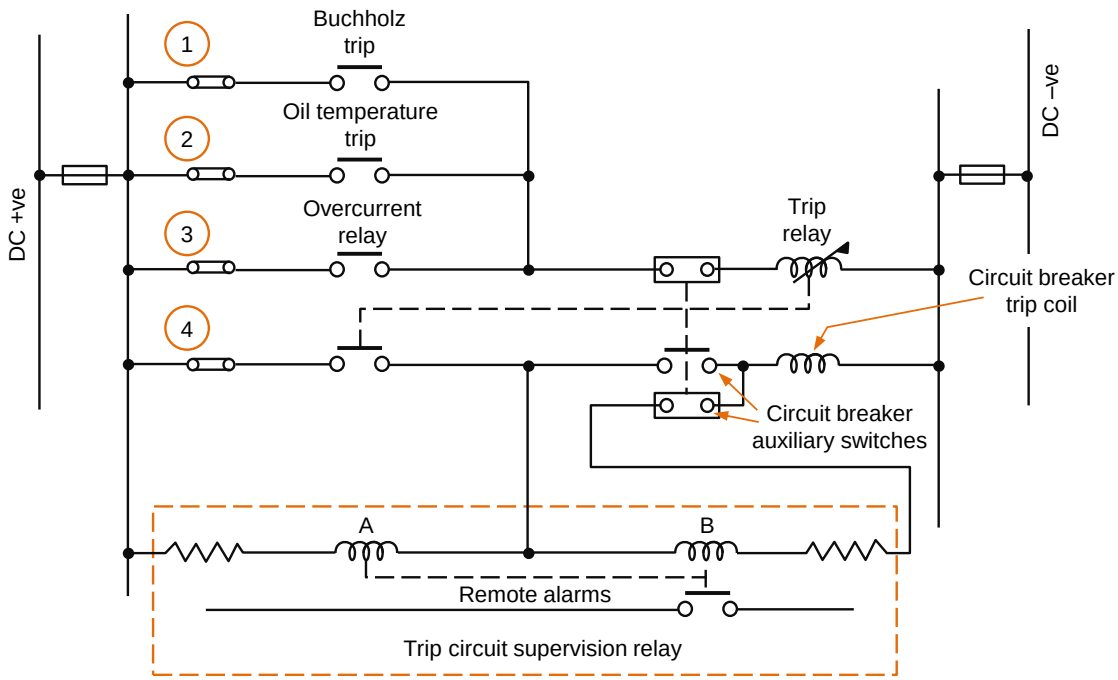

Figure 16-37 Trip circuit supervision scheme

16.4.8 Auxiliary and Battery Supplies

Both auxiliary and battery supplies are required for protection.

Auxiliary Supplies

Usually, the substation AC supplies are derived from a dedicated transformer. This is fed direct from the substation busbars with auto changeover to a standby supply from one of the distribution feeders on failure.

The operational use of the local supply, and the possible effects of its loss, include the following:

- Lighting – the substation will be in darkness
- Indication – in older substations AC indication is used on the control panels, hence, the circuit breaker state will not be indicated. Modern substations use 50V DC
- Tap changer supplies – tap changer operation may be required due to a system disturbance. This will not occur automatically with loss of AC tap changer motor supplies. Odd output voltages may result. It is possible to tap change via a hand operated crank
- Transformer auxiliary supplies – the transformer may be fitted with and require in service fans and pumps for cooling. Loss of supply to these units may cause overheating
- Circuit breaker spring charging motors – generally, circuit breakers using spring or hydraulic closing store a closing sequence. This makes reclosing possible without a local supply being present. Once the stored closing capacity is exhausted, manual recharging is necessary
- Rectifier closing of circuit breakers – this is employed in some zone stations, not necessarily on all the circuit breakers. Sometimes it is restricted to capacitor banks
- Battery chargers – the loss of AC supply means that batteries are not being charged. The useful life of the batteries then depends upon the size, condition and drain involved. A five hour or better serviceable condition is aimed for. The drain on batteries varies with location but may include:
    - trip circuit supervision relays
    - under frequency relays
    - indicating lights
- Loss of charger supply leading to battery failure – this means that:
    - the tripping supply could be lost or, at least, become unreliable
    - supervisory control could be lost and remote indication could be incorrect

- Diminishing DC supply – this can cause serious problems as partial operations can result. That is, a trip circuit closes and the trip coil is energised sufficiently to burn it out but not to operate correctly. In solid state equipment the derived voltage rails (typically 12, 15, 18, 24V) are similarly affected and damage may result.

Battery Supplies

Modern substations are equipped with three battery chargers and supplies, that is, 2 x 110V supplies and 1 x 50V supply.

The battery chargers are equipped with alarms, three types being used:

1. AC Fail – this monitors the AC supply to the charger, therefore, it operates for blown fuses as well as a more general loss of supply

2. Charger Fail – this monitors the output from the charger to the battery, therefore it operates for a faulty charger, as well as loss of AC

3. Earth Fault – this monitors that the positive and negative rails are clear of earth.

The 50V supply is used for indication, control and supervisory.
The 110V supplies are used to give independent duplicate protection for the high voltage circuits (66kV and above).

On the low voltage side (33kV and below), only one protection is used. However, the transformer LV circuit breakers are supplied by Battery 1 and the feeders from Battery 2. This ensures that a fault on one battery will not disable all the LV protection.

16.5 Protection Relays

The basic principles of protection systems have changed little, however protection relay technology has progressed from the original electromechanical operation to electronic operation and finally to the current technology of digital relays.

16.5.1 Electromechanical Protection Relay

Electromechanical protection relay converts the voltages and currents to magnetic and electric forces and torques that press against spring tensions in the relay. The tension of the spring and taps on the electromagnetic coils in the relay are the main processes by which a user sets the relay. These relays are common in older substations.

Figure 16-38 Typical electromechanical protection relay

16.5.2 Solid State Relay

In a solid state relay, the incoming voltage and current waveforms are monitored by analog electronical circuits to produce analog values which are compared to settings made by the user via potentiometers in the relay, and in some case, taps on relay transformers. These relays are common in older substations.

16.5.3 Digital Protection Relay

The digital protection relay, also known as microprocessor-based relays and introduced in the 1980's, detects faults in an electric power system. To detect the fault, this relay uses a microprocessor to analyse power system voltages, currents or other processed quantities. The digital protection relay is also called a *numeric protection relay*. These relays are used in modern substations.

Figure 16-39 A typical modern digital protection relay

As the digital protection relays are common place in modern substations the internal components are further described below.

Input processing

Low voltage and low current analog signals derived from the secondary of voltage transformers and current transformers are further reduced in magnitude, filtered, digitised and processed to provide digital values for voltage and current. These processed signals are used to calculate the voltage and current magnitude and with additional processing phase angles, real power, reactive power, impedance, and waveform distortion.

Logic processing

The relay analyses the resultant digitised values to determine if action is required under its protection algorithm(s). Protection algorithms are a set of logic equations in part designed by the protection engineer, and in part designed by the relay manufacturer. The relay is capable of applying advanced logic.

It is capable of analysing whether the relay should trip or restrain from tripping based on parameters set by the user, compared against many functions of its analogue inputs, relay contact inputs, timing and order of event sequences.

If a fault condition is detected, output contacts operate to trip the associated circuit breaker(s).

Parameter setting

The logic is user-configurable and can vary from simply changing front panel switches or moving of circuit board jumpers to accessing the relay's internal parameter setting webpage via a communications link on another computer hundreds of kilometres away.

The relay may have an extensive collection of settings, beyond what can be entered via front panel knobs and dials, and these settings are transferred to the relay via an interface with a personal computer. This same interface may be used to collect event reports from the relay.

Event recording

In some relays, a short history of the entire sampled data is kept for oscillographic records. The event recording would include some means for the user to see the timing of key logic decisions, relay input/output (I/O) changes, and see (in an oscillographic fashion) at least the fundamental component of the incoming analogue parameters.

Data display

Digital relays provide a front panel display, or a display on a terminal through a communication interface. This is used to display relay settings and real-time current/voltage values, etc.

More complex digital relays will have metering and communication systems, allowing the relay to become an element in a SCADA system.

16.6 Horizon Power Protection Requirements

Horizon Power protection requirements are detailed in the document *Protection Philosophy for Interconnected and Non-interconnected Systems*, CS10# 3485205. This document provides recommended minimum standard for new installations, however existing older installations may not be compliant in all respects.

Transmission system operation demands reliable high speed tripping of faulted apparatus. Therefore the basic requirement for 220kV, 132 kV and 66kV transmission system protection is to provide duplicated and fully independent protection systems.

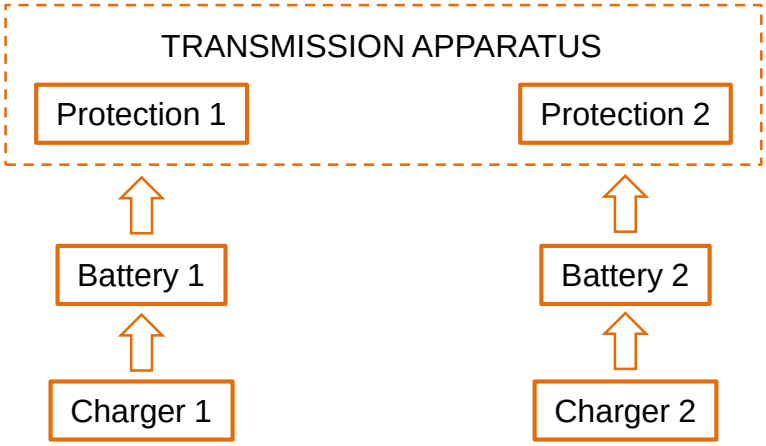

Figure 16-40 Arrangement for the protection of transmission apparatus by using two independent protection racks. Each rack incorporates a 110V battery bank with its associated battery charger.

This requirement is achieved with two independent protection racks (Protection 1 and Protection 2), either of which can operate to clear the fault. The protections are supplied with DC power from respective battery banks (110V Battery 1 and 110V Battery 2) and charged with the associated battery chargers (Battery Charger 1 and Battery Charger 2).

To facilitate battery maintenance, a battery parallelling system is installed to allow both protection 1 and 2 to be operated off one battery for the time it takes to maintain the other battery.

For 33kV and below, distribution system protection is not duplicated and operates on one battery and charger (either Protection 1 or Protection 2).

An abridged summary table of the Horizon Power protection requirements is given below.

Transmission line protection	PROTECTION 1	PROTECTION 2
220kV (over 25km)	Distance with TPS	Distance with TPS Direction Earth fault
66kV and 132kV (up to 10 km long)	Current differential	Current differential or Distance protection with TPS Directional Earth Fault
66kV and 132kV (10-25 km long)	Current differential or Distance with TPS	Distance (time stepped) Directional Earth Fault
66kV and 132kV (greater than 25 km long)	Distance with TPS	Distance (time stepped) Directional Earth Fault
Substation Protection	**PROTECTION 1**	**PROTECTION 2**
Busbar 220kV, 132kV & 66kV	Current differential	Current differential
Busbar 33kV and below	Outdoor busbar Transformer LV overcurrent and earth fault protects outdoor busbars	
	Indoor switchgear busbar Current differential	
Typical Transformer protection (Note – this is typical only and variations are used dependent on the transformer voltage, MVA rating, and winding configuration.)	Biased differential LV Restricted Earth Fault Main tank pressure HV winding temperature LV overcurrent LV earth fault	HV Overcurrent Main tank Buchholz Tap changer pressure Oil temperature LV Standby earth fault HV Restricted earth fault Earthing compensator pressure (if secondary or tertiary winding is delta connected)
Feeder 33kV and below	Overcurrent Earth fault Sensitive earth fault HiZ earth fault	
22kV and 11kV Capacitor and reactor bank	Overcurrent Earth fault + Out of balance for capacitor bank	

Table 16-3 Summary table of Horizon Power's protection requirements

SECTION SEVENTEEN

Transmission Switching Programs

Table of Contents

List of Figures

List of Tables

No table of figures entries found.

17. Transmission Switching Programs

17.1 Introduction

As transmission switching program writing has the same purpose, roles, responsibilities, tools and software as Distribution program writing, see Section 9 for these details.

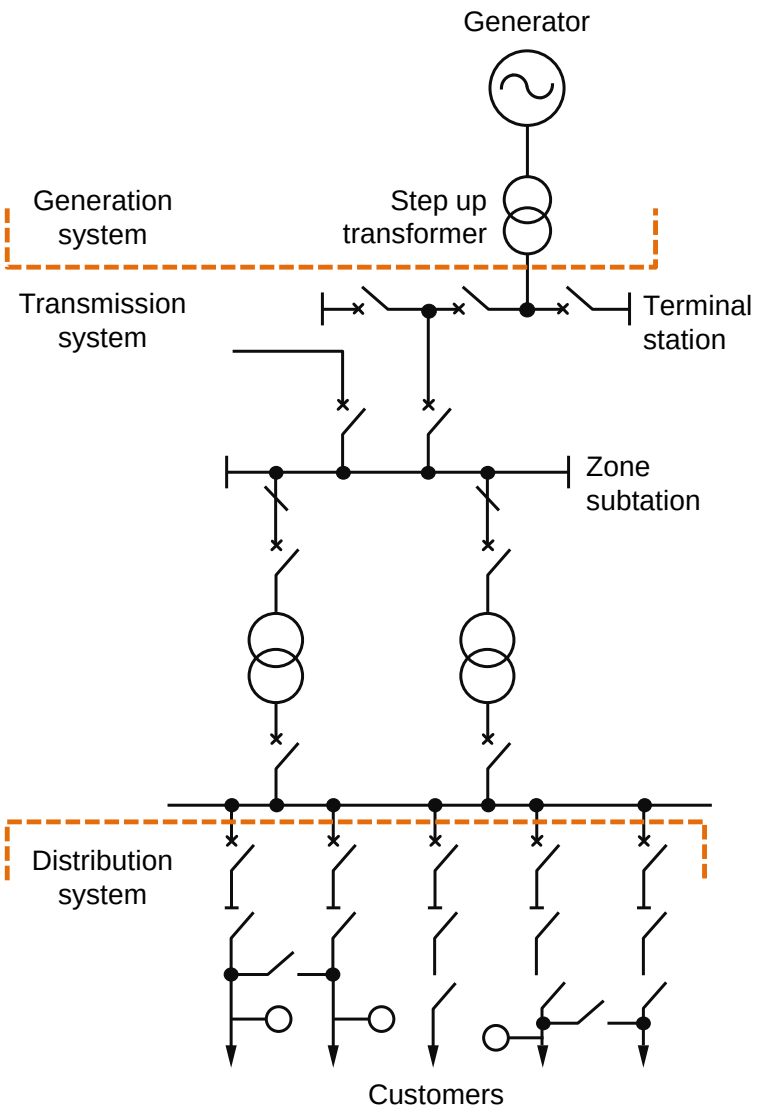

Figure 17-1 Boundary of transmission and distribution systems

Figure 17-1 shows the typical boundary between the transmission and distribution systems. The distribution system includes zone substation feeder circuit breakers and the associated network outside the substation. The remainder of the zone substation, all terminal stations and power station switchyards form the transmission system.

17.1.1 Transmission Outage Request

All outages of transmission apparatus, either primary or secondary, require an outage request to be submitted to the System Operations Manager at least 10 business days prior to the planned outage.

The switching operator should check the Transmission Calendar prior to submitting their outage request to determine whether other planned outages have already been scheduled.

The System Operations Manager will assess the outage request against network considerations and other planned outages and advise the outage applicant of either approval, concerns or potential retiming of the outage request.

17.1.2 Apparatus Recall to Service

If a system emergency arises HPCC can discontinue a switching program and initiate recall to service of the apparatus. Before recall switching can commence the apparatus must be safe to return to service and associated work permits cancelled.

17.1.3 Extended or Non-Continuous Programs

Switching programs which require continuation over several days and/or which involve progress to a specific point and then a significant delay before proceeding with the remaining operations, will not recommence without authority from the HPCC.

The recommencing points will be separately indicated as an item in the program.

17.2 Privately Owned Generation or Substations

When switching involves privately owned generation or substations, close co-ordination between the Horizon Power switching operator and the private authority switching operator is required.

Where an isolation point is required on private apparatus to allow Horizon Power to work on its apparatus an Operating Agreement (OA) must be issued. The OA is issued by the private authority switching operator and received by the Horizon Power switching operator. The OA issue and cancellation must be listed as steps in the switching program and the OA number registered with HPCC. The applicable Horizon Power work permit may then be issued for the work to be undertaken.

Also, where an isolation point is required on Horizon Power apparatus to allow the private operator to work on its apparatus an OA must be issued. The OA is issued by the Horizon Power switching operator and received by the private authority switching operator. The OA issue and cancellation must be listed as steps in the switching program and the OA number registered with HPCC. The applicable private authority work permit may then be issued for the work to be undertaken.

Full details on OAs is provided in Field Instruction *Operating Agreement*.

17.3 Network Considerations

Switching programs mainly involve the operation of primary plant, however there may also be steps required on protection and secondary circuits or steps to check or change the current system configuration status. These steps are specific to the protection and secondary circuit installed and the network location involved in the switching program.

17.3.1 Protection and Secondary Circuit Considerations

Depending on apparatus involved, a switching program may include steps for actions to be carried out on protection and secondary circuits. These steps will be included as items in the switching program. In most cases these steps will be performed by HPCC, however there may be situations where the steps are required to be performed on site by the switching operator.

Examples of protection change steps are shown in *Switching Program Example 3 – Step 17 and 18* below.

17.3.2 System Configuration

A switching program may include system configuration steps to check the current status of the network or prepare the network for the intended changes which will occur during the switching program. These steps are very important to ensure the system remains stable during and after the running of the switching program, and may involve actions by privately owned generation sites and networks.

These system configuration steps will usually be conducted by HPCC.

Examples of system configuration check steps are shown in *Switching Program Example 4 – Step 2, 3 and 4* below.

17.4 Switching Program Examples

Four examples of transmission switching programs follow.

SWITCHING PROGRAM EXAMPLE 1

This program isolates and earths KRT-BUL81 line at both ends for the issue of an EAP on the 132kV line.

Electrical Switching Schedule/Job

Request No. 34208	**Job Status** Completed	**Job No.** J15-7430-u

View detailed version (not suitable for printed programs)

Job Name/Purpose of Work	V1 - DANR 34208 - 27/11/2015 - KRT - SWITCHING TRAINING ISOLATE KRT-BUL 81 LINE FOR TASK2				
Start Date/Time	27-Nov-2015 10:30	**Created by**	Paul Maccan	**Date/Time**	02-Nov-2015 15:39
End Date/Time	27-Nov-2015 12:00	**Checked by**	PANTING, MARTY - 0400 959 844	**Date/Time**	20-Nov-2015 14:23
Plan Duration (hrs)	2	**Approved by**	Brett Taylor	**Date/Time**	26-Nov-2015 13:33
Requested By					

Switch Operator IC	ROUSE, ALLAN - 0487 200 673	**Telephone No.**	-	**Radio No.**	
Switch Operator	MACCAN, PAUL - 9159 7244	**Telephone No.**			

Operation District/Zone	West Pilbara Transmission	**Desk Contact No.**	9159 7244

Comments/Notes	

Substation/Feeders/Reclosers
None

Limits of Isolation

Limits of Work Area

Supply Interruption	No
Involves Permanent System Change	No
Customer Notification	No

Item	Operator	Location	Component (Volt, Type, ID)	Action	System Date / Time
1			ISOLATE KRT-BUL 81 LINE FOR SWITCHING TRAINING TASK2	Comments	27-Nov-2015 11:47
2			ISOLATION	Cntact HPDC,Req Perm to Commence	27-Nov-2015 10:44
3			ENSURE SYSTEM READY TO SWITCH	Comments	27-Nov-2015 10:45
4	TELE	KRT	132kV CB KRT 875.0	Tele Off	27-Nov-2015 10:46
5	TELE	KRT	132kV CB KRT 873.0	Tele Off	27-Nov-2015 10:46
6			CHECK LOAD SHIFT	Comments	27-Nov-2015 10:47
7	TELE	BUL	132kV CB BUL 803.0	Tele Off	27-Nov-2015 10:47
8	PANTING, MARTY	KRT	132kV CB KRT 875.0 SET TO LOCAL	Check Off	27-Nov-2015 10:50
9	PANTING, MARTY	KRT	132kV ISOL KRT 875.3	Local Off & Attach DL	27-Nov-2015 10:55
10	PANTING, MARTY	KRT	132kV CB KRT 873.0 SET TO LOCAL	Check Off	27-Nov-2015 10:56
11	PANTING, MARTY	KRT	132kV ISOL KRT 873.3B	Local Off & Attach DL	27-Nov-2015 10:56
12	ROUSE, ALLAN	BUL	132kV CB BUL 803.0 SET TO LOCAL	Check Off	27-Nov-2015 11:05
13	ROUSE, ALLAN	BUL	132kV ISOL BUL 803.5	Local Off & Attach DL	27-Nov-2015 11:07
14	ROUSE, ALLAN	BUL	132kV ES BUL 803.7	Prove De-energized, ON & DL	27-Nov-2015 11:11
15	PANTING, MARTY	KRT	132kV ES KRT 874.7	Prove De-energized, LCL ON & DL	27-Nov-2015 11:14
16	PANTING, MARTY	KRT Work Site	BB KRT KRT BUL 81 (TJUN) ENMAC STEP	Prove De-energise, Attach Earth	27-Nov-2015 11:15
17	PANTING, MARTY		EAP-5045-u on/at O/H Main between NTO_BUL_803_CHS, NTO_BUL_803_CHS and NTO_KRT_873_CHS, NTO_KRT_873_CHS BOOK# 24853	Issue EAP	27-Nov-2015 11:23
18				Advise HPTC Isolation Complete	27-Nov-2015 11:23
19			******RESTORATION*******	Advise HPTC Restoration to Start	27-Nov-2015 11:23
20				Check Staff & Equipment Clear	27-Nov-2015 11:23
21				Cancel EA No# - Advise HPDC	27-Nov-2015 11:23
22		KRT	132kV ES KRT 874.7		27-Nov-2015 11:25

Item	Operator	Location	Component (Volt, Type, ID)	Action	System Date / Time
	PANTING, MARTY			Local Off & Remove DL	
23	PANTING, MARTY	KRT Work Site	BB KRT KRT BUL 81 (TJUN) ENMAC STEP	Remove Earth	27-Nov-2015 11:25
24	ROUSE, ALLAN	BUL	132kV ES BUL 803.7	Remove DL & OFF	27-Nov-2015 11:31
25	ROUSE, ALLAN	BUL	132kV CB BUL 803.0 CHECK IN LOCAL	Check Off	27-Nov-2015 11:32
26	ROUSE, ALLAN	BUL	132kV ISOL BUL 803.5	Local On & Remove DL	27-Nov-2015 11:35
27	ROUSE, ALLAN	BUL	132kV CB BUL 803.0 SET TO REMOTE	Check Off	27-Nov-2015 11:36
28	PANTING, MARTY	KRT	132kV CB KRT 875.0 CHECK IN LOCAL	Check Off	27-Nov-2015 11:38
29	PANTING, MARTY	KRT	132kV ISOL KRT 875.3	Local On & Remove DL	27-Nov-2015 11:40
30	PANTING, MARTY	KRT	132kV CB KRT 875.0 SET TO REMOTE	Check Off	27-Nov-2015 11:41
31	PANTING, MARTY	KRT	132kV CB KRT 873.0 CHECK IN LOCAL	Check Off	27-Nov-2015 11:42
32	PANTING, MARTY	KRT	132kV ISOL KRT 873.3B	Local On & Remove DL	27-Nov-2015 11:43
33	PANTING, MARTY	KRT	132kV CB KRT 873.0 SET TO REMOTE	Check Off	27-Nov-2015 11:43
34	TELE	KRT	132kV CB KRT 875.0	Tele On	27-Nov-2015 11:46
35	TELE	KRT	132kV CB KRT 873.0	Tele On	27-Nov-2015 11:46
36	TELE	BUL	132kV CB BUL 803.0	Tele On	27-Nov-2015 11:47
37				Check Load	27-Nov-2015 11:47
38				Advise HPTC Schedule Complete	27-Nov-2015 11:47

SWITCHING PROGRAM EXAMPLE 2

This program isolates CLB 132/33/22kV T1 for the issue of an EAP to change a HV bushing.

CLB T1 has three windings and therefore three isolation points are required. The isolation points are 132kV CLB802.5, 33kV CLB603.4 and for 22kV the tertiary winding, the station transformer No1 is isolated on the changeover board 415V fuses. The earthing compensator is not a source of supply.

As an additional precaution a VA has been issued on the T1 end of the 33kV busbar where a crane will be located near to the busbar to change the HV bushing.

Electrical Switching Schedule/Job

Request No. 36200			**Job Status** Completed	**Job No.** J16-5246-v	
		View detailed version (not suitable for printed programs)			
Job Name/Purpose of Work	V1 - DNAR 36200 - 24/10/2016 - CLB - ISOLATE CLB T1 FOR HV BUSHING CHANGE				
Start Date/Time	24-Oct-2016 06:00	**Created by**	Paul Maccan	**Date/Time**	17-Oct-2016 09:51
End Date/Time	28-Oct-2016 15:00	**Checked by**	PANTING, MARTY - (1to10)	**Date/Time**	17-Oct-2016 10:50
Plan Duration (hrs)	106	**Approved by**	Mark Dykstra	**Date/Time**	23-Oct-2016 14:14
Requested By					

Switch Operator IC	MACCAN, PAUL - (7to10)	**Telephone No.**	0477723827	**Radio No.**	
Switch Operator		**Telephone No.**			

Operation District/Zone	West Pilbara Transmission	**Desk Contact No.**	9159 7244

Comments/Notes	

Substation/Feeders/Reclosers
None

Limits of Isolation
Limits of Work Area

Supply Interruption	No
Involves Permanent System Change	No
Customer Notification	No

Item	Operator	Location	Component (Volt, Type, ID)	Action	System Date / Time
1			ISOLATE CLB T1 FOR HV BUSHING CHANGE OUT.	Schedule	
2			ISOLATION	Cntact HPDC,Req Perm to Commence	24-Oct-2016 07:34
3			ENSURE CLB-CBS 61 TIE IS IN SERVICE AND RECONFIGURE GENERATION READY TO ISOLATE CLB T1	Comments	24-Oct-2016 07:35
4	TELE	CLB	33kV CB CLB 603.0	Tele Off	24-Oct-2016 07:35
5	TELE	CLB	132kV CB CLB 802.0	Tele Off	24-Oct-2016 07:36
6	MACCAN, PAUL	CLB	132kV CB CLB 802.0 SWITCH TO LOCAL	Check Off	24-Oct-2016 07:47
7	MACCAN, PAUL	CLB	132kV ISOL CLB 802.5	Local Off & Attach DL	24-Oct-2016 07:50
8	MACCAN, PAUL	CLB	33kV CB CLB 603.0 SWITCH TO LOCAL	Check Off	24-Oct-2016 07:52
9	MACCAN, PAUL	CLB	33kV ISOL CLB 603.4	Local Off & Attach DL	24-Oct-2016 07:54
10	MACCAN, PAUL	ALIAS-189337-o	CLB LV REMOVE LV FUSES FOR CHANGE OVER BOARD	LV DISO OFF, Fit Barriers & DL	24-Oct-2016 07:58
11	MACCAN, PAUL	CLB	TX TX1 CLB T1 SIDE OF CLB 802.0	Prove De-energise, Attach Earth	24-Oct-2016 08:25
12	MACCAN, PAUL	CLB	33kV CB CLB 603.0 CLB 603.0 SIDE OF CLB T1	Prove De-energise, Attach Earth	24-Oct-2016 08:25
13	MACCAN, PAUL	CLB Work Site	BB CLB 3110480 (TJUN) CLB EC T1 SIDE OF CLB T1	Prove De-energise, Attach Earth	24-Oct-2016 08:25
14	MACCAN, PAUL	CLB	33kV ISOL CLB 603.4 CLB 603.4 SIDE OF CLB 603.0	Prove De-energise, Attach Earth	24-Oct-2016 08:26
15	MACCAN, PAUL	CLB	EAP-3301-v on/at TX TX1 BOOK# 625	Issue EAP	27-Oct-2016 07:35
15.1	MACCAN, PAUL		VA-2691-v on/at BB between CLB Work Site, BB CLB CLB 603.4 (TJUN) and CLB Work Site, BB CLB CLB 603.4 VT (TJUN) BOOK NO: 363	Issue VA (on Circuit)	27-Oct-2016 07:35
16				Advise HPDC Isolation Complete	24-Oct-2016 08:42
17			RESTORATION	Advise HPDC Restoration to Start	27-Oct-2016 07:36
18				Check Staff & Equipment Clear	27-Oct-2016 07:36
18.1	MACCAN, PAUL			Cancel VA No#	27-Oct-2016 07:36

Item	Operator	Location	Component (Volt, Type, ID)	Action	System Date / Time
19				Cancel EA No# - Advise HPDC	27-Oct-2016 07:36
20	MACCAN, PAUL	CLB	TX TX1 CLB T1 SIDE OF CLB 802.0	Remove Earth	27-Oct-2016 07:48
21	MACCAN, PAUL	CLB	33kV CB CLB 603.0 CLB 603.0 SIDE OF CLB T1	Remove Earth	27-Oct-2016 07:48
22	MACCAN, PAUL	CLB Work Site	BB CLB 3110480 (TJUN) CLB EC T1 SIDE OF CLB T1	Remove Earth	27-Oct-2016 07:48
23	MACCAN, PAUL	CLB	33kV ISOL CLB 603.4 CLB 603.4 SIDE OF CLB 603.0	Remove Earth	27-Oct-2016 07:48
24	MACCAN, PAUL	CLB	33kV CB CLB 603.0 CHECK IN LOCAL	Check Off	27-Oct-2016 07:51
25	MACCAN, PAUL	CLB	33kV ISOL CLB 603.4	Local On & Remove DL	27-Oct-2016 07:51
26	MACCAN, PAUL	CLB	33kV CB CLB 603.0 SET TO REMOTE	Check Off	27-Oct-2016 07:51
27	MACCAN, PAUL	CLB	132kV CB CLB 802.0 CHECK IN LOCAL	Check Off	27-Oct-2016 07:56
28	MACCAN, PAUL	CLB	132kV ISOL CLB 802.5	Local On & Remove DL	27-Oct-2016 07:57
29	MACCAN, PAUL	CLB	132kV CB CLB 802.0 SET TO REMOTE	Check Off	27-Oct-2016 07:57
30	MACCAN, PAUL	ALIAS-189337-o	CLB LV FUSES IN LV CHANGE OVER BOARD	LV DISO ON, Remove Barriers & DL	27-Oct-2016 07:58
31	MACCAN, PAUL		ENSURE ALL PERSONELL ARE IN RELAY ROOM BEFORE ENERGISING NEW EQUIPMENT.	Comments	27-Oct-2016 08:05
32	TELE	CLB	132kV CB CLB 802.0	Tele On	27-Oct-2016 08:13
33	MACCAN, PAUL		INSPECT TX AFTER ENERGISATION	Comments	27-Oct-2016 08:24
34			NOTIFY ROCC CLB T1 IS TO BE PLACED BACK IN SERVICE	Notify Relevant Power Station Controller	27-Oct-2016 08:29
35	TELE	CLB	33kV CB CLB 603.0	Tele On	27-Oct-2016 08:29
36				Advise HPDC Schedule Complete	27-Oct-2016 08:31

SWITCHING PROGRAM EXAMPLE 3

This program is an example for circuit breaker maintenance. ROE607.0 is returned to service after maintenance under an EAP and ROE601.0 is removed from service and an EAP issued for maintenance.

The program also returns T2 to service and takes T1 out of service. It should be noted there are 33kV circuit breakers on T1 and T2, but no 11kV circuit breakers. This requires the transformer paralleling/un-paralleling on 11kV disconnectors.

To enable supply to be maintained to the Harding River line while ROE601.0 is maintained, bypass pole top switch 5390 is closed.

Electrical Switching Schedule/Job

Request No. 36678			**Job Status** Completed	**Job No.** J17-1265-u	
		View detailed version (not suitable for printed programs)			
Job Name/Purpose of Work	V1 - DNAR 36678 - 01/03/2017 - ROE - RESTORE ROE 607.0 AND REPAIR ROE 601.0				
Start Date/Time	01-Mar-2017 09:00	**Created by**	Paul Maccan	**Date/Time**	28-Feb-2017 13:51
End Date/Time	02-Mar-2017 17:00	**Checked by**	KUZAMBA, EVERMORE-0439768429 (1-10)	**Date/Time**	28-Feb-2017 14:22
Plan Duration (hrs)	33	**Approved by**	Tom McEachern	**Date/Time**	01-Mar-2017 14:30
Requested By					

Switch Operator IC	MACCAN, PAUL - (7to10)	**Telephone No.**	0477723827	**Radio No.**	
Switch Operator		**Telephone No.**			

Operation District/Zone	West Pilbara Transmission	**Desk Contact No.**	9159 7244

Comments/Notes	

Substation/Feeders/Reclosers
None

Limits of Isolation
Limits of Work Area

Supply Interruption	No
Involves Permanent System Change	No
Customer Notification	No

Item	Operator	Location	Component (Volt, Type, ID)	Action	System Date / Time
1			Reinstate ROE 607.0 (F17-685 -u) and isoolate ROE 601.0 for oil leak repair.	Schedule	
2				Cntact HPDC,Req Perm to Commence	01-Mar-2017 15:18
3				Check Staff & Equipment Clear	01-Mar-2017 15:18
4			EAP-12085-u from F17-685-u	Cancel EA No# - Advise HPDC	01-Mar-2017 15:20
5	MACCAN, PAUL	ROE	33kV ISOL ROE 607.4 Between ROE 607.0 & ROE 607.4	Remove Earth	01-Mar-2017 15:28
6	MACCAN, PAUL	ROE	Circuit 607 ROE 607.0 CT Between ROE 607.0 & ROE T2	Remove Earth	01-Mar-2017 15:28
7	MACCAN, PAUL	ROE	33kV CB ROE 607.0 Check in local	Check Off	01-Mar-2017 15:29
8	MACCAN, PAUL	ROE	33kV ISOL ROE 607.4	Remove DL & On	01-Mar-2017 15:31
9	MACCAN, PAUL	ROE	33kV CB ROE 607.0 Switch to remote	Check Off	01-Mar-2017 15:32
10	TELE	ROE	33kV CB ROE 607.0	Tele On	01-Mar-2017 15:36
11	TELE	ROE	TX1 TAP POSITION Auto Manual Match taps ROE T1 & T2 Server Timed out waiting for the control reply	Tele Set Manual	01-Mar-2017 15:37
12	MACCAN, PAUL	ROE	11kV ISOL ROE 307.4 Check load pick up	Remove DL & On	01-Mar-2017 15:40
13	MACCAN, PAUL	ROE	11kV ISOL ROE 302.4 Check load transfer	Off	01-Mar-2017 15:41
14	TELE	ROE	33kV CB ROE 603.0	Tele Off	01-Mar-2017 15:44
15	TELE	ROE	TX2 TAP POSITION Auto Manual Server Timed out waiting for the control reply	Tele Set Auto	01-Mar-2017 15:45
16			ISOLATION ROE 601.0	Comments	01-Mar-2017 15:47
17	TELE	CLB	CIRCUIT 604 A/R	Tele Set Disable	01-Mar-2017 15:47
18	TELE	CLB	CIRCUIT 604 SEF	Tele Set Disable	01-Mar-2017 15:48
19	TELE	ROE	Circuit 601 A/R Scan Task timeout waiting for back indication	Tele Set Disable	01-Mar-2017 15:48
20	MACCAN, PAUL	HAMPTON ST,SS; SUB STN,ROEBOURNE	33kV PTSD 5390	On	01-Mar-2017 15:53
21	TELE	ROE	33kV CB ROE 601.0 HARDING RIVER LINE Check load shift	Tele Off	01-Mar-2017 15:54

Item	Operator	Location	Component (Volt, Type, ID)	Action	System Date / Time
22	MACCAN, PAUL	ROE	33kV CB ROE 601.0 HARDING RIVER LINE Switch to local	Check Off	01-Mar-2017 15:59
23	MACCAN, PAUL	ROE	33kV ISOL ROE 601.4	Off & Attach DL	01-Mar-2017 16:01
24	MACCAN, PAUL	ROE	33kV ISOL ROE 601.5	Off & Attach DL	01-Mar-2017 16:03
25	MACCAN, PAUL	ROE	Circuit 601 ROE 601.0 CT Between ROE 601.5 & ROE 601 CT	Prove De-energise, Attach Earth	01-Mar-2017 16:12
26	MACCAN, PAUL	ROE	33kV ISOL ROE 601.4 Between ROE 601.0 & ROE 601.4	Prove De-energise, Attach Earth	01-Mar-2017 16:12
27	TELE	CLB	CIRCUIT 604 A/R	Tele Set Enable	01-Mar-2017 16:13
28	TELE	CLB	CIRCUIT 604 SEF	Tele Set Enable	01-Mar-2017 16:15
29	MACCAN, PAUL		book numbr 02131	Permit Issue Details	01-Mar-2017 16:21
30	MACCAN, PAUL		EAP-12105-u on/at BB between ROE, 33kV TX ROE_TX_S and ROE, 33kV CB ROE 601.0 HARDING RIVER LINE BOOK#02131	Issue EAP	02-Mar-2017 10:02
31				Advise HPDC Isolation Complete	01-Mar-2017 16:23
32			RESTORATION	Advise HPDC Restoration to Start	02-Mar-2017 10:02
33				Check Staff & Equipment Clear	02-Mar-2017 10:02
34				Cancel EA No# - Advise HPDC	02-Mar-2017 10:02
35	MACCAN, PAUL	ROE	Circuit 601 ROE 601.0 CT BETWEEN ROE 601 CT & ROE 601.5	Remove Earth	02-Mar-2017 10:11
36	MACCAN, PAUL	ROE	33kV ISOL ROE 601.4 BETWEEN ROE 601.0 & ROE 601.4	Remove Earth	02-Mar-2017 10:11
37	TELE	CLB	CIRCUIT 604 A/R	Tele Set Disable	02-Mar-2017 10:06
38	TELE	CLB	CIRCUIT 604 SEF	Tele Set Disable	02-Mar-2017 10:06
39	MACCAN, PAUL	ROE	33kV CB ROE 601.0 HARDING RIVER LINE CHECK IN LOCAL	Check Off	02-Mar-2017 10:17
40	MACCAN, PAUL	ROE	33kV ISOL ROE 601.4	Remove DL & On	02-Mar-2017 10:22
41	MACCAN, PAUL	ROE	33kV ISOL ROE 601.5	Remove DL & On	02-Mar-2017 10:22

Item	Operator	Location	Component (Volt, Type, ID)	Action	System Date / Time
42	MACCAN, PAUL	ROE	33kV CB ROE 601.0 HARDING RIVER LINE SWITCH TO REMOTE	Check Off	02-Mar-2017 10:22
43	TELE	ROE	33kV CB ROE 601.0 HARDING RIVER LINE CHECK LOAD PICK UP	Tele On	02-Mar-2017 10:41
44	MACCAN, PAUL	HAMPTON ST,5S; SUB STN,ROEBOURNE	33kV PTSD 5390	Off	02-Mar-2017 10:42
45	TELE	CLB	CIRCUIT 604 A/R	Tele Set Enable	02-Mar-2017 10:42
46	TELE	CLB	CIRCUIT 604 SEF	Tele Set Enable	02-Mar-2017 10:42
47	TELE	ROE	Circuit 601 A/R	Tele Set Enable	02-Mar-2017 10:42
48				Advise HPDC Schedule Complete	02-Mar-2017 10:42

SWITCHING PROGRAM EXAMPLE 4

This program is for repairs to the 33kV CT located between CLB606.0 and 606.4b1.

There are several initial HPCC steps required to ensure the system is ready for switching as the 33kV busbar connects to Rio Tinto.

The isolation points are CLB606.4a1 and CLB606.4b1 and program earths are fitted either side of the CT. Also a program earth is fitted between CLB606.0 and CLB606.4a1 to extend the safe work area to include CLB606.0 as this circuit breaker is in very close proximity to the CT to e worked on.

Electrical Switching Schedule/Job

Request No. 36698	**Job Status** Completed	**Job No.** J17-1606-v

View detailed version (not suitable for printed programs)

Job Name/Purpose of Work	V1 - DNAR 36698 - 06/03/2017 - CLB - CLB 606 CT REPAIRS				
Start Date/Time	06-Mar-2017 06:00	**Created by**	Paul Maccan	**Date/Time**	04-Mar-2017 10:46
End Date/Time	06-Mar-2017 17:00	**Checked by**	KUZAMBA, EVERMORE-0439768429 (1-10)	**Date/Time**	04-Mar-2017 11:26
Plan Duration (hrs)	12	**Approved by**	John McCaskie	**Date/Time**	05-Mar-2017 12:38
Requested By					

Switch Operator IC	MACCAN, PAUL - (7to10)	**Telephone No.**	0477723827	**Radio No.**	
Switch Operator	COOPER, AARON	**Telephone No.**			

Operation District/Zone	West Pilbara Transmission	**Desk Contact No.**	9159 7244

Comments/Notes	

Substation/Feeders/Reclosers
None

Limits of Isolation

Limits of Work Area

Supply Interruption	No
Involves Permanent System Change	No
Customer Notification	No

Item	Operator	Location	Component (Volt, Type, ID)	Action	System Date / Time
1			ISOLATE CLB 606.0 CT FOR MAINTENANCE	Schedule	
2	MACCAN, PAUL		ENSURE BOTH CLB-CBS 61 & DMP-DMS 61&62 LINES ARE IN SERVICE	Contact HPDC,Req Perm to Commence	06-Mar-2017 06:04
3	HPCC		ENSURE THAT RIO ARE SYNCRONISED FROM DMP TO CLB	Notify Relevant Power Station Controller	06-Mar-2017 06:06
4	HPCC		ENSURE GENERATION LEVELS ENABLE CLB 606.0 TO BE OPENED	Check Load	06-Mar-2017 06:06
5	TELE	CLB	33kV CB CLB 606.0	Tele Off	06-Mar-2017 06:01
6	MACCAN, PAUL	CLB	33kV CB CLB 606.0 SWITCH TO LOCAL	Check Off	06-Mar-2017 06:09
7	MACCAN, PAUL	CLB	33kV ISOL CLB 606.4A1	Local Off & Attach DL	06-Mar-2017 06:16
8	MACCAN, PAUL	CLB	33kV ISOL CLB 606.4B1	Local Off & Attach DL	06-Mar-2017 06:16
9	MACCAN, PAUL	CLB	33kV ISOL CLB 606.4A1 BETWEEN CLB 606.4A1 & CLB 606.0	Prove De-energise, Attach Earth	06-Mar-2017 06:26
10	MACCAN, PAUL	CLB	33kV CB CLB 606.0 .BETWEEN CLB 606.0 & 606 CT	Prove De-energise, Attach Earth	
11	MACCAN, PAUL	CLB	33kV ISOL CLB 606.4B1 BETWEEN CLB 606.0 & CLB 606.4B1	Prove De-energise, Attach Earth	06-Mar-2017 06:26
12	MACCAN, PAUL		BOOK NUMBER 10112 PLEASE ABORT STEP 10. NOT NEEDED	Permit Issue Details	06-Mar-2017 06:33
13	MACCAN, PAUL		EAP-4606-v on/at BB between CLB, Circuit 606 CLB 606.0 CT and CLB, 33kV CB CLB 606.0 BOOK#10112	Issue EAP	06-Mar-2017 08:05
14	MACCAN, PAUL			Advise HPDC Isolation Complete	06-Mar-2017 06:41
15				Advise HPDC Restoration to Start	06-Mar-2017 08:05
16				Check Staff & Equipment Clear	06-Mar-2017 08:05
17				Cancel EA No# - Advise HPDC	06-Mar-2017 08:05
18	MACCAN, PAUL	CLB	33kV ISOL CLB 606.4A1 BETWEEN CLB 606.4A1 & CLB 606.0	Remove Earth	06-Mar-2017 08:11
19		CLB	33kV CB CLB 606.0 BETWEEN CLB 606.0 & 606 CT NOT USED	Remove Earth	
20	MACCAN, PAUL	CLB	33kV ISOL CLB 606.4B1 BETWEEN CLB 606.0 & CLB 606.4B1	Remove Earth	06-Mar-2017 08:11

Item	Operator	Location	Component (Volt, Type, ID)	Action	System Date / Time
21	MACCAN, PAUL	CLB	33kV CB CLB 606.0 CHECK IN LOCAL	Check Off	06-Mar-2017 08:12
22	MACCAN, PAUL	CLB	33kV ISOL CLB 606.4A1	Local On & Remove DL	06-Mar-2017 08:14
23	MACCAN, PAUL	CLB	33kV ISOL CLB 606.4B1	Local On & Remove DL	06-Mar-2017 08:15
24	MACCAN, PAUL	CLB	33kV CB CLB 606.0 SWITCH TO REMOTE	Check Off	06-Mar-2017 08:21
25			MATCH VOLTS CLB BUS BAR A & CLB BUS BAR B	Check Volts	06-Mar-2017 08:21
26			ENSURE THAT RIO ARE SYNCRONISED FROM DMP TO CLB	Notify Relevant Power Station Controller	06-Mar-2017 08:22
27	TELE	CLB	33kV CB CLB 606.0	Tele On	06-Mar-2017 08:24
28				Advise HPDC Schedule Complete	06-Mar-2017 08:25

SECTION EIGHTEEN

Transmission Testing and Commissioning

Table of Contents

List of Figures

No table of figures entries found.

List of Tables

18. Transmission Testing and Commissioning

18.1 Introduction

This section deals with the procedures necessary for the testing and commissioning of transmission apparatus. This section must be read in conjunction with Manual One, Section 10.

Field Instruction *Construction or Commissioning in Operational Switchyards* details the minimum safety related requirements for construction or commissioning of equipment in operational switchyards.

18.2 Systems Commissioning

As previously explained in Section 10, whenever a new item of apparatus is installed, it must go through a process of being proved suitable for service, or ‘commissioned’.

This applies to the primary apparatus such as transformers and circuit breakers and secondary systems such as protection, control and communication systems. Primary and secondary apparatus must be proved to be correctly installed and function as the design intended.

The commissioning process has two basic stages:

1. pre-commissioning – this is the process of inspection and testing of primary apparatus and associated secondary systems including the wiring to ensure the installation is constructed to the required standard and will function as designed. Testing may include the application of lethal test voltages but does not include energising the primary apparatus from the power system.

2. commissioning – this is the final stage where the new apparatus is energised from the power system to prove the primary apparatus and secondary systems are fit for service and functioning in accordance with the intended design.

The process of installation and commissioning new apparatus involves the sequence shown in s.18.2.1 to s.18.2.3.

18.2.1 Handover for Testing and Remedial Work

Once construction or repair work is complete on apparatus it is handed over for pre-commissioning testing. After handover, further construction work is not usually permitted to take place on the apparatus.

Wiring connections may involve many locations (e.g. marshalling boxes, switchgear compartments, etc.), and as such the requirement to cease construction work applies at all locations.

After handover, if inspection or testing finds defects and remedial work is required, then all testing must cease while the remedial work is undertaken. All relevant tests on that work are then repeated.

18.2.2 Pre-Commissioning Tests

With construction and handover complete, prior to placing any apparatus in service, it is necessary to carry out inspection and testing to prove the primary apparatus and all protection, control, metering and communication systems have been installed and operate correctly.

This testing is done to prove compliance with the relevant approved drawings, plant specifications and design philosophies, and the protection and synchronising systems are suitable for service on Horizon Power's systems.

The pre-commissioning requirements and activities are usually managed and conducted by the commissioning consultants and specialists.

18.2.3 Final Commissioning Tests

Final commissioning tests requires all new primary plant and associated protection, synchronising, instrumentation, metering and control circuits are proven functional by energisation. The initial energisation of new primary apparatus is to be from existing proven apparatus and protection systems.

Phasing out of primary plant and correct operation of synchronising systems (where fitted) ensures the new apparatus can be integrated into the existing system. All VT secondary circuits are proved for correct phasing and phase rotation.

'Load testing' requires the primary apparatus to be placed under load conditions to prove the operation of the primary apparatus and secondary systems. At this time protection systems are tested to prove the current in relays and stability of unit protection schemes.

As an example, Table 18-1 shows the range of activities to be carried out by the commissioning group and the switching operator when commissioning a new transformer into an existing substation.

It should be noted each activity is simplified and usually involves multiple steps to complete. Both the commissioning group and the switch operator have specific responsibilities which must be coordinated and performed in a sequential order.

Activity	Responsibility	Activity
1	Commissioning group	All radiator and pump valves are checked to ensure they are in the correct state. Fans and pumps are selected for operation. Buchholz relay is bled of air. Protection systems are checked operational. Backup protection implemented.
2	Switching operator	Check all existing permits are relinquished and cancelled. STT issued for commissioning. The transformer is energised.
3	Commissioning group	The on-load tap changer is run through the full range of taps if system voltages allow, whilst measuring and recording the VT secondary voltage for each tap, to check for any discontinuity.
4	Switching operator	Phase out transformer. The new transformer placed in parallel with an existing on-line transformer.
5	Commissioning group	Protection ‘load tests’ conducted.
6	Commissioning group	Handover to Asset Management. STT relinquished.
7	Switching operator	STT cancelled. The transformer is left energised from one side (“on soak”) for a period of at least 24 hours before being considered suitable for service.

Table 18-1 Transformer commissioning activities

The commissioning requirements and activities are often managed and conducted by the commissioning consultants and specialists.

18.3 Commissioning Program

As commissioning tests involve manipulating system voltages, and load currents a definite sequence of switching is required.

This is usually to:

1. enable the new plant, and/or protective system to be energised from a 'known' or 'proven' protective system. That is, a protection system or primary plant item that is unaffected by the construction work and that has proven performance under system conditions, and

2. prove the protection and control system. To do this, the flow of power must often be manipulated.

A protection commissioning program prepared by protection personnel is focussed on protection concerns and does not always consider relevant operational requirements. Operations requirements may include the initial preparation of the network for the intended commissioning switching, such as off- loading busbars, parallelling by closing open points or switching on reactors.

The switching operator must communicate and liaise closely with the commissioning group prior to writing the switching program to ensure the switching program provides the intended commissioning sequence and is also operationally acceptable.

18.3.1 Example Commissioning and Switching Programs

Shown below is an example of a protection commissioning program (GHD protection commissioning quality verification sheet) written and checked by commissioning personnel and an example of a switching program used by the switching operator to perform the switching required to commission the apparatus.

GHD	PROTECTION COMMISSIONING GROUP COMMISSIONING PROGRAM QUALITY VERIFICATION SHEET (P15)

COMMISSIONING PROJECT No.: HDT BAY 3 ENERGISATION PLAN, TX3 and SWC 71 Line		
LOCATION: Hedland Terminal		
PLANT: HDT BAY 3 EXTENSION, X33.3a, X33.7a, X33.0, X33 CT's, X33.7b, 33.3b, X34.7b, X35.3, X35.7a, CVT 3, X34.5, X34.7, X35 CT's, TX3, 702.1 & 702.2 CVT's, 702.3 CT's, 702.0, 702.5 702.7 UP TO DISCONNECTOR SWC 707.5 and DISCONNECTION POINT BETWEEN HDT X35.0 and X35 CT		
PROPOSED DATE OF COMMISSIONING: 27/03/2017		
COMMISSIONING OFFICER: Owen Lawton		
APPROVED BY: SYSTEM SERVICES COORDINATOR CONSTRUCTION COMMISSIONING		
CIRCULATION		
POSITION	NAME	LOCATION
Project Manager	Craig Palmer	GHD Head Office
Site Manager	Peter Crisp	SHPS
Discipline Engineer	Dinesh Mithanthaya	GHD Head Office
Switching Operator	Evermore Kuzamba/Wayne Karslake	HP Port Hedland
GENERAL COMMENTS		
1. The general and switching sequence of this program must not be over-ridden by a switching program without prior approval of the Commissioning Officer. 2. Where new primary plant is to be energised and operated for the first time, the switching operator should take appropriate precautions. 3. HP/GHD Coordinator to circulate copies of this Commissioning Program to all relevant local delegated operating authorities.		
SPECIFIC COMMENTS		
FINAL INSPECTION / TEST		
Report Compiled By: Owen Lawton	Sign:	Date: 21/02/2017
Reviewed & Final Inspection By: Kennedy Mikuti	Sign:	Date: 23/03/2017

COMMISSIONING PROGRAM

1.0 PURPOSE

The energisation of HDT Bay 3, inclusive of the Bay 3 TX and HDT/SWC Line up to SWC707.5 and temporary disconnection point from X35.0 and X35 CT's at HDT. This program facilitates the commissioning of the new plant.

2.0 METHOD

The new plant will be energised and proven on potential through BUS A, with X41.0 as the energising circuit breaker (please note that this could trip due to inrush current from the transformer, there has been a procedure of de-magnetising the TX core to reduce the chance of a trip occurring). Fast clearance in the event of plant failure will be provided by the existing and proven BUS A protection 1 and 2. Trip checks would not be required on X41.0 from the BUS A protection schemes, as they were completed during the outage prior to energisation under an STT. Due to the primary configuration of HDT for initial energisation, BUS A protection schemes will not require modification. Any fault current on Bay 3 inclusive of the new plant will cause a trip on the BUS A protection 1 and 2 and open the X41.0 CB.

HPCC to confirm that SCADA screens in operational mode.

This energisation will be staged to allow for TX 24hr soak and safe operation on potential of the
TX disconnectors.
Stage 1 – Energise New Bay 3 up to disconnection point between HDT X34.5 and TX3. Also disconnection point between HDT X35.0 and X35 CT's
Stage 2 – Energise New TX 3 up to HDT 702.5 (24 hour soak period) Stage 3 – Energise New HDT/SWC Line up to SWC 707.5 (24 Hour soak)
Stage 4 – HP to provide load for on load checks, stability checks and complete close Sync checks on SWC 707.0, HDT 702.0 and HDT X33.0.

After the first energisation of each stage the new equipment will be operated on potential.

3.0 PREREQUISITES:

BRS/APD have completed and signed off all relevant sections of the Hedland Terminal Energisation Plan

Contact Details

Function	Name	Phone Number
Tester in Charge	Owen Lawton	0428 322 749
Commissioning Personnel	Brad Birkbeck	0403 869 699
Switching Operator	Wayne Karslake	0418 907 994
System Operations Control Centre	TBA	

Nomenclature:

SO = System Operations Switching Operator
HPCC = Horizon Power Control Centre
CP = Commissioning Personnel
TIC = Tester in Charge

4.00	INITIAL CONDITIONS	Responsibilities
4.01	Confirm BRS/APD have signed off, all relevant sections of the APD/BRS Energisation Plan	BRS/APD/SO/TIC
4.02	Confirm all associated protection schemes and SCADA are in service	SO/TIC
4.03	Confirm all associated Bay A permits are cancelled	SO/TIC/HPCC
4.04	All non-essential personnel to clear the substation	SO/TIC
4.05	CHECK HDT X51.0 OPEN	SO/TIC/HPCC
4.06	CHECK HDT X41.0 OPEN	SO/TIC/HPCC
4.07	CHECK HDT X51.3 OPEN, LOCKED AND DANGER LABELED	SO/TIC/HPCC
4.08	CHECK HDT X41.3 OPEN	SO/TIC/HPCC
4.09	CHECK OPEN POINT FROM BAY 3 X35.0 to X35 CT's and X34.5 to TX 3 HAS APPROPRIATE CLEARANCES	SO/TIC/HPCC
4.10	CHECK HDT X31.7a OPEN	SO/TIC/HPCC
4.11	CHECK HDT X33.7a OPEN	SO/TIC/HPCC
4.12	CHECK HDT X33.7b OPEN	SO/TIC/HPCC
4.13	CHECK HDT X34.7b OPEN	SO/TIC/HPCC
4.14	CHECK HDT X35.7a OPEN	SO/TIC/HPCC
4.15	CHECK HDT X34.7 OPEN	SO/TIC/HPCC
4.16	CHECK HDT 702.7 OPEN	SO/TIC/HPCC
4.17	CHECK SWC 707.7 OPEN	SO/TIC/HPCC
4.18	CHECH SWC 707.5 OPEN, LOCKED AND DANGER LABELED	SO/TIC/HPCC

5.00	PREPARATION FOR ENERGISATION - STAGE 1	Responsibilities
5.01	Issue a secondary STT for load checks of associated protection schemes	SO/TIC/HPCC
5.02	HDT X31.4 CLOSED	SO/HPCC
5.03	HDT X33.3a CLOSED	SO/HPCC

5.04	HDT X33.0 CLOSED	SO/HPCC
5.05	HDT X33.3b CLOSED	SO/HPCC
5.06	HDT X35.3 CLOSED	SO/HPCC
5.07	HDT X34.5 CLOSED	SO/HPCC
5.08	HDT X41.3 CLOSED	SO/HPCC
5.09	HDT X41.4 CLOSED	SO/HPCC

6.00	ENERGISATION - STAGE 1	Responsibilities
6.01	Ensure that all personnel are inside the HDT switch room	BRS/APD/SO/TIC
6.02	HDT X41.0 CLOSED TO ENERGISE NEW PLANT	HPCC/SO
6.03	Inspect new plant after 3 minutes	BRS/APD/SO/TIC
6.04	Ensure that all personnel are clear of equipment	BRS/APD/SO/TIC
6.05	HDT X34.5 OPEN	SO/HPCC
6.06	Check for excessive sparking or noise.	BRS/APD/SO/TIC
6.07	HDT X34.5 CLOSED	SO/HPCC
6.08	Check for excessive sparking or noise.	BRS/APD/SO/TIC
6.09	HDT X35.3 OPEN	SO/HPCC
6.10	Check for excessive sparking or noise.	BRS/APD/SO/TIC
6.11	HDT X35.3 CLOSED	SO/HPCC
6.12	Check for excessive sparking or noise.	BRS/APD/SO/TIC
6.13	HDT X33.3b OPEN	SO/HPCC
6.14	Check for excessive sparking or noise.	BRS/APD/SO/TIC
6.15	HDT X33.3b CLOSED	SO/HPCC

6.16	Check for excessive sparking or noise.	BRS/APD/SO/TIC
6.17	HDT X33.0 OPEN	SO/HPCC
6.18	HDT X33.0 CLOSED	SO/HPCC
6.19	HDT X33.3a OPEN	SO/HPCC
6.20	Check for excessive sparking or noise.	BRS/APD/SO/TIC
6.21	HDT X33.3a CLOSED	SO/HPCC
6.22	Check for excessive sparking or noise.	BRS/APD/SO/TIC
6.23	Commissioning personnel to carry out any load checks, phasing out.	BRS/APD/SO/TIC

7.00	PREPARATION FOR ENERGISATION - STAGE 2	Responsibilities
7.01	CANCEL STT	SO/TIC/HPCC
7.02	HDT X41.0 OPEN	SO/HPCC
7.03	HDT X41.3 OPEN, LOCKED AND DANGER LABELED	SO/HPCC
7.04	ISSUE EAP TO CONNECT DROPPERS BETWEEN HDT X34.5 AND TX3	BRS/APD/SO/TIC
7.05	CANCEL EAP ONCE CONNECTION AND DUCTERING COMPLETE	BRS/APD/SO/TIC
7.06	Issue a secondary STT for load checks of associated protection schemes	SO/TIC/HPCC
7.07	HDT X34.5 CLOSED	SO/HPCC
7.08	HDT X41.3 CLOSED	SO/HPCC
7.09	HDT 702.0 CLOSED	SO/HPCC
7.10	HDT 702.5 OPEN LOCKED AND DANGER LABELED	SO/HPCC

8.00	ENERGISATION - STAGE 2	Responsibilities
8.01	Ensure that all personnel are inside the HDT switch room	BRS/APD/SO/TIC
8.02	HDT X41.0 CLOSED TO ENERGISE NEW PLANT	SO/HPCC
8.03	Inspect new plant after 3 minutes	SO/HPCC
8.04	Ensure that all personnel are clear of equipment	BRS/APD/SO/TIC
8.05	HDT 702.0 OPEN	BRS/APD/SO/TIC
8.06	HDT 702.0 CLOSE	SO/HPCC
8.07	HDT 702.0 OPEN	SO/HPCC
8.08	Commissioning personnel to carry out any load checks	BRS/APD/SO/TIC
8.09	LEAVE TX ON SOAK FOR 24 HOURS	SO/HPCC

9.00	PREPARATION FOR ENERGISATION - STAGE 3	Responsibilities
9.01	HDT X41.0 OPEN	SO/TIC/HPCC
9.02	HDT 702.5 CLOSED	SO/HPCC
9.03	HDT 702.0 CLOSED	SO/HPCC
9.04	SWC 707.5 OPEN LOCKED AND DANGER LABELED	SO/HPCC

10.0	ENERGISATION - STAGE 3	Responsibilities
10.1	Ensure that all personnel are inside the HDT switch room	BRS/APD/SO/TIC
10.2	HDT X41.0 CLOSED TO ENERGISE NEW PLANT	SO/HPCC
10.3	Inspect new plant after 3 minutes	BRS/APD/SO/TIC
10.4	Ensure that all personnel are clear of equipment	BRS/APD/SO/TIC

10.5	HDT 702.5 OPEN	SO/HPCC
10.6	Check for excessive sparking or noise.	BRS/APD/SO/TIC
10.7	HDT 702.5 CLOSED	SO/HPCC
10.8	Check for excessive sparking or noise.	SO/HPCC
10.9	Commissioning personnel to carry out any load checks and phase out	BRS/APD/SO/TIC
10.10	LEAVE LINE ON SOAK FOR 24 HOURS	BRS/APD/SO/TIC

11.0	LOAD, STABILITY and SYNC CHECKS - STAGE 4	Responsibilities
11.1	HORIZON POWER TO PREPARE NEW HDT 220kv BAY 3 THROUGH TO NEW SWC EQUIPMENT TO TAKE LOAD	SO/HPCC
11.2	Commissioning personnel to carry out any load and stability checks and TX AVR checks.	BRS/APD/SO/TIC
11.3	Synchronising checks to be carried out on SWC707.0, HDT 702.0 and HDT X33.0 to allow for Dead line-Dead bus, Dead line-Live Bus, Live line-Dead Bus and Live line-Live Bus operations.	BRS/APD/SO/TIC
11.4	CANCEL STT	SO/TIC/HPCC
11.5	EQUIPMENT IN SERVICE	SO/HPCC

Electrical Switching Program

Request No.36779
Job No.J17-2151-v
Job Status Approved
View detailed version (not suitable for printed programs)

Job Name/Purpose of Work	V1 - DNAR 36779 - 4/4/17 - HDT - COMMISSION HDT TX 3 AND HDT-SWC 71 LINE				
Start Date/Time	04-Apr-2017 09:00	**Created by**	Wayne Karslake	**Date/Time**	25-Mar-2017 07:32
End Date/Time	04-Apr-2017 17:00	**Checked by**	MCMANUS,HEDLEY-(1-10) 0407427452	**Date/Time**	25-Mar-2017 07:34
Plan Duration (hrs)	9	**Approved by**	Kel Ellery	**Date/Time**	01-Apr-2017 08:00
Requested By					

Switch Operator IC	KARSLAKE, WAYNE - (1to10)	**Telephone No.**	0418907994	**Radio No.**	
Switch Operator		**Telephone No.**			

Operation District/Zone	East Pilbara Transmission	**Desk Contact No.**	[redacted]
Comments/Notes			

Substation/Feeders/Reclosers	
HDT X41.0 , HDT X43.0 , SWC 702.0 , HDT X51.0 , SHT X11.0 , HDT X33.0 , SWC 708.0 , HDT 702.0 , SWC 707.0 , HDT X53.0 , SHT X13.0 , HDT X35.0 , SWC 701.0 ,	
Supply Interruption	No
Involves Permanent System Change	No
Customer Notification	No

Limits of Isolation
Limits of Work Area

Item	Operator	Location	Component (Volt, Type, ID)	Action	System Date / Time
1			V1 - DNAR - 31/3/17 - HDT - Commission HDT TX 3 and HDT-SWC 71 line	Schedule	
2				Advise HPTC Schedule to Commence	04-Apr-2017 12:38
3			Confirm all permits associated with HDT TX 3 and HDT-SWC 71 line are cancelled	Comments	04-Apr-2017 12:38
4	HPTC		Confirm system conditions enable Sw. Pg. to commence	Comments	04-Apr-2017 12:38
5	HPTC			Notify Relevant Power Station Controller	04-Apr-2017 12:38
6	KARSLAKE, WAYNE	HDT	66kV ES HDT 702.7	Check Off	04-Apr-2017 12:48
7		HDT	66kV ISOL HDT 702.5 NOT REQUIRED	Local Off & Attach DL	
7.1	KARSLAKE, WAYNE	HDT	66kV ISOL HDT 702.5	Check Off & Attach DL	04-Apr-2017 12:49
8	KARSLAKE, WAYNE	HDT	220kV ISOL HDT X34.5 Confirm taps removed between HDT x34.5/7 and HDT TX 3	Remove Taps	04-Apr-2017 12:50
9	KARSLAKE, WAYNE	HDT	220kV ES HDT X34.7	Check Off	04-Apr-2017 12:52
10		HDT	220kV ISOL HDT X34.5 NOT REQUIRED	Check On	
10.1	TELE	HDT	220kV ISOL HDT X34.5 SELECT ROMOTE	Tele On	04-Apr-2017 12:52
10.2	KARSLAKE, WAYNE	HDT	220kV ISOL HDT X34.5	Check On	04-Apr-2017 12:54
11	KARSLAKE, WAYNE		Confirm taps removed between HDT X35.0 CT's and HDT X35.0	Comments	04-Apr-2017 12:54
12	KARSLAKE, WAYNE	HDT	220kV ES HDT X35.7A	Check Off	04-Apr-2017 12:55
12.1	TELE	HDT	220kV ISOL HDT X35.3 SELECT REMOTE	Tele On	04-Apr-2017 12:56
13	KARSLAKE, WAYNE	HDT	220kV ISOL HDT X35.3 Select Remote	Check On	04-Apr-2017 12:57
14	KARSLAKE, WAYNE	HDT	220kV ES HDT X34.7B	Check Off	04-Apr-2017 12:57
14.1	TELE	HDT	220kV ISOL HDT X33.3B SELECT REMOTE	Tele On	04-Apr-2017 12:57
15	KARSLAKE, WAYNE	HDT	220kV ISOL HDT X33.3B Select Remote	Check On	04-Apr-2017 12:58
16	KARSLAKE, WAYNE	HDT	220kV ES HDT X33.7B	Check Off	04-Apr-2017 12:58
16.1	TELE	HDT	220kV CB HDT X33.0 SELECT REMOTE Scan Task timeout waiting for back indication	Tele On	04-Apr-2017 13:13

Item	Operator	Location	Component (Volt, Type, ID)	Action	System Date / Time
16.2	TELE	HDT	220kV CB HDT X33.0	Tele On	04-Apr-2017 13:16
17		HDT	220kV CB HDT X33.0 NOT REQUIRED	Check On	
18		HDT	220kV ES HDT X33.7A	Check Off	04-Apr-2017 12:59
18.1	TELE	HDT	220kV ISOL HDT X33.3A SELECT REMOTE Scan Task timeout waiting for back indication	Tele On	04-Apr-2017 13:00
18.2	TELE	HDT	220kV ISOL HDT X33.3A Scan Task timeout waiting for back indication	Tele On	04-Apr-2017 13:01
18.3	TELE	HDT	220kV ISOL HDT X33.3A	Tele On	04-Apr-2017 13:06
19		HDT	220kV ISOL HDT X33.3A Select Remote	Check On	04-Apr-2017 13:06
20	KARSLAKE, WAYNE	HDT	220kV ES HDT X31.7A	Local Off & Remove DL	04-Apr-2017 13:05
21	KARSLAKE, WAYNE		Issuing Officer - W. Karslake TIC - O. Lawton Book No.	Permit Issue Details	04-Apr-2017 13:17
22	KARSLAKE, WAYNE	HDT	STT-2966-v on/at 220kV CB HDT X33.0 Issue STT for protection mods and testing during energisation up to but excluding HDT TX 3. BOOK # 10313	Issue STT without Isolation	04-Apr-2017 13:15
22.1	KARSLAKE, WAYNE		STT-5040-u on/at BB between HDT, 220kV CB HDT X35.0 and HDT, 220kV ES HDT X35.7B BOOK # 10313	Issue STT without Isolation	04-Apr-2017 13:58
23	KARSLAKE, WAYNE		Confirm all relevant protection schemes in service	Comments	04-Apr-2017 13:19
24	KARSLAKE, WAYNE		Confirm all non essential personnel clear of the substation	Comments	04-Apr-2017 13:19
25	TELE	HDT	220kV CB HDT X41.0	Tele Off	04-Apr-2017 13:19
26	TELE	HDT	220kV CB HDT X51.0	Tele Off	04-Apr-2017 13:20
27	KARSLAKE, WAYNE	HDT	220kV CB HDT X41.0 Select Local	Check Off	04-Apr-2017 13:21
28	KARSLAKE, WAYNE	HDT	220kV CB HDT X51.0 Select Local	Check Off	04-Apr-2017 13:22
29	TELE	HDT	220kV ISOL HDT X51.3	Tele Off	04-Apr-2017 13:22
30	KARSLAKE, WAYNE	HDT	220kV ISOL HDT X51.3 Disable closing supply and select local	Check Off & Attach DL	04-Apr-2017 13:23
31	KARSLAKE, WAYNE	HDT	220kV ISOL HDT X31.4 Enable closing supply and select remote	Check Off & Remove DL	04-Apr-2017 13:25
32	TELE	HDT	220kV ISOL HDT X31.4 Scan Task timeout waiting for back indication	Tele On	04-Apr-2017 13:25
32.1	TELE	HDT	220kV ISOL HDT X31.4 Scan Task timeout waiting for back indication	Tele On	04-Apr-2017 13:26
32.2	TELE	HDT	220kV ISOL HDT X31.4	Tele On	04-Apr-2017 13:27
33		HDT	220kV ISOL HDT X31.4	Check On	04-Apr-2017 13:27
34	KARSLAKE,	HDT	220kV CB HDT X41.0	Check Off	04-Apr-2017 13:29

Item	Operator	Location	Component (Volt, Type, ID)	Action	System Date / Time
	WAYNE		Select Remote		
35	KARSLAKE, WAYNE		Ensure all personnel inside relay room	Comments	04-Apr-2017 13:30
36	TELE	HDT	220kV CB HDT X41.0 THIS STEP WILL ENERGISE ALL HDT BAY 3 220kV EQUIPMENT (EXCLUDING TX3) FOR THE FIRST TIME.	Tele On	04-Apr-2017 13:30
37	KARSLAKE, WAYNE		Inspect HDT Bay 3 220kV plant	Comments	04-Apr-2017 13:34
38	TELE	HDT	220kV ISOL HDT X34.5	Tele Off	04-Apr-2017 13:34
39	KARSLAKE, WAYNE	HDT	220kV ISOL HDT X34.5	Check Off	04-Apr-2017 13:35
40	TELE	HDT	220kV ISOL HDT X34.5	Tele On	04-Apr-2017 13:35
41	KARSLAKE, WAYNE	HDT	220kV ISOL HDT X34.5	Check On	04-Apr-2017 13:37
42	TELE	HDT	220kV ISOL HDT X35.3	Tele Off	04-Apr-2017 13:38
43	KARSLAKE, WAYNE	HDT	220kV ISOL HDT X35.3	Check Off	04-Apr-2017 13:38
44	TELE	HDT	220kV ISOL HDT X35.3	Tele On	04-Apr-2017 13:38
45	KARSLAKE, WAYNE	HDT	220kV ISOL HDT X35.3	Check On	04-Apr-2017 13:44
46	TELE	HDT	220kV ISOL HDT X33.3B	Tele Off	04-Apr-2017 13:45
47	KARSLAKE, WAYNE	HDT	220kV ISOL HDT X33.3B	Check Off	04-Apr-2017 13:45
48	TELE	HDT	220kV ISOL HDT X33.3B	Tele On	04-Apr-2017 13:47
49	KARSLAKE, WAYNE	HDT	220kV ISOL HDT X33.3B	Check On	04-Apr-2017 13:48
50	TELE	HDT	220kV CB HDT X33.0	Tele Off	04-Apr-2017 13:48
51	TELE	HDT	220kV CB HDT X33.0	Tele On	04-Apr-2017 13:49
51.1	HPTC	HDT	220kV ISOL HDT X33.3A	Replace Taps	04-Apr-2017 13:50
52	TELE	HDT	220kV ISOL HDT X33.3A	Tele Off	04-Apr-2017 13:51
53	KARSLAKE, WAYNE	HDT	220kV ISOL HDT X33.3A	Check Off	04-Apr-2017 13:52
54	TELE	HDT	220kV ISOL HDT X33.3A	Tele On	04-Apr-2017 13:53
55	KARSLAKE, WAYNE	HDT	220kV ISOL HDT X33.3A	Check On	04-Apr-2017 13:55
56	KARSLAKE, WAYNE			Cancel STT No# - Advise HPDC	04-Apr-2017 13:58
57	TELE	HDT	220kV ISOL HDT X31.4	Tele Off	04-Apr-2017 14:00
58	KARSLAKE, WAYNE	HDT	220kV ISOL HDT X31.4 Disable closing supply and select local	Check Off & Attach DL	04-Apr-2017 14:02
59	KARSLAKE, WAYNE	HDT	66kV CB HDT 702.0 Select Local	Check Off	04-Apr-2017 14:04
60	KARSLAKE, WAYNE	HDT	66kV ISOL HDT 702.5	Check Off & DL'ed	04-Apr-2017 14:04

Item	Operator	Location	Component (Volt, Type, ID)	Action	System Date / Time
61	KARSLAKE, WAYNE	HDT	66kV TX TX3 HDT TX 3 side of HDT X34.7	Prove De-energise, Attach Earth	04-Apr-2017 14:38
62	KARSLAKE, WAYNE	HDT	220kV ISOL HDT X34.5 HDT X33 side of HDT X34.5	Prove De-energise, Attach Earth	04-Apr-2017 14:38
63	KARSLAKE, WAYNE		Issuing Officer - W. Karslake RIC - R. Sage Book No.	Permit Issue Details	04-Apr-2017 14:38
64	KARSLAKE, WAYNE	HDT	EAP-5016-v on/at 220kV ES HDT X34.7 Issue EAP to replace HDT TX 3 taps and notify HPCC. Book 6519	Issue EAP	04-Apr-2017 16:08
65				Cancel EA No# - Advise HPDC	04-Apr-2017 16:08
66		HDT	66kV TX TX3 HDT TX 3 side of HDT X34.7	Remove Earth	04-Apr-2017 16:08
67		HDT	220kV ISOL HDT X34.5 HDT X33 side of HDT X34.5	Remove Earth	04-Apr-2017 16:08
68	KARSLAKE, WAYNE	HDT	220kV ES HDT X34.7	Check Off	04-Apr-2017 16:13
69	KARSLAKE, WAYNE	HDT	220kV ISOL HDT X34.5	Check On	04-Apr-2017 16:14
70	KARSLAKE, WAYNE	HDT	66kV CB HDT 702.0 Select Remote	Check Off	04-Apr-2017 16:19
71	TELE	HDT	66kV CB HDT 702.0 Interlocks to be bypassed	Tele On	04-Apr-2017 16:19
72	TELE	HDT	220kV CB HDT X33.0	Tele Off	04-Apr-2017 16:20
73	KARSLAKE, WAYNE	HDT	220kV CB HDT X33.0 Select Local	Check Off	04-Apr-2017 16:22
74	KARSLAKE, WAYNE	HDT	220kV ISOL HDT X31.4 Enable closing supply and select remote	Check Off & Remove DL	04-Apr-2017 16:23
75	TELE	HDT	220kV ISOL HDT X31.4 Scan Task timeout waiting for back indication	Tele On	04-Apr-2017 16:24
75.1	TELE	HDT	220kV ISOL HDT X31.4	Tele On	04-Apr-2017 16:27
76	KARSLAKE, WAYNE	HDT	220kV ISOL HDT X31.4	Check On	04-Apr-2017 16:28
77	KARSLAKE, WAYNE		Issuing Officer - W. Karslake TIS - O. Lawton Book No.	Permit Issue Details	04-Apr-2017 16:29
77.1	KARSLAKE, WAYNE		permit details Wayne take 2	Comments	04-Apr-2017 16:34
78	KARSLAKE, WAYNE	HDT	STT-2976-v on/at 66kV TX TX3 Issue STT for protection mods and testing during HDT TX 3 and HDT-SWC 71 line commissioning book#10314 O Lawton	Issue STT without Isolation	11-Apr-2017 11:41
78.1	TELE	HDT	220kV ISOL HDT X35.3	Tele Off	04-Apr-2017 16:36
79	KARSLAKE, WAYNE	HDT	220kV CB HDT X33.0 Select Remote	Check Off	04-Apr-2017 16:38
80	KARSLAKE,		Ensure all personnel inside relay room	Comments	04-Apr-2017 16:41

Item	Operator	Location	Component (Volt, Type, ID)	Action	System Date / Time
	WAYNE				
80.1	KARSLAKE, WAYNE	HDT	220kV ISOL HDT X34.5	Replace Taps	04-Apr-2017 16:42
81	TELE	HDT	220kV CB HDT X33.0 THIS STEP WILL ENERGISE HDT TX 3 FOR THE FIRST TIME	Tele On	04-Apr-2017 16:42
82	KARSLAKE, WAYNE		Inspect plant	Comments	04-Apr-2017 17:17
83	TELE	HDT	66kV CB HDT 702.0 Server Timed out waiting for the control reply	Tele Off	04-Apr-2017 17:18
83.1	TELE	HDT	66kV CB HDT 702.0 Server Timed out waiting for the control reply	Tele Off	04-Apr-2017 17:20
83.2	TELE	HDT	66kV CB HDT 702.0	Tele Off	04-Apr-2017 17:20
84	TELE	HDT	66kV CB HDT 702.0	Tele On	04-Apr-2017 17:21
85	TELE	HDT	66kV CB HDT 702.0	Tele Off	04-Apr-2017 17:21
85.1	KARSLAKE, WAYNE	HDT	VA-7430-u on/at 220kV CB HDT X35.0 BOOK # 13261	Issue VA (on Circuit)	01-May-2017 11:07
85.2	KARSLAKE, WAYNE	HDT	VA-3616-v on/at 66kV TX TX3 13261	Issue VA (on Circuit)	05-May-2017 08:27
86			Soak TX for 24 hours.	Comments	05-Apr-2017 14:03
87			Advise HPCC Sw. Pg. to continue	Comments	05-Apr-2017 14:03
87.1	TELE	SWC	66kV CB SWC 707.0 Server Timed out waiting for the control reply	Tele Off	05-Apr-2017 14:05
88	KARSLAKE, WAYNE	SWC	66kV ISOL SWC 707.4	Check Off & DL'ed	05-Apr-2017 14:11
89	KARSLAKE, WAYNE	SWC	66kV ES SWC 707.7	Check Off	05-Apr-2017 14:11
90	KARSLAKE, WAYNE	SWC	66kV ISOL SWC 707.5	Check On	05-Apr-2017 14:12
91	KARSLAKE, WAYNE	SWC	66kV CB SWC 707.0 Select Remote	Check Off	05-Apr-2017 14:13
92	TELE	SWC	66kV CB SWC 707.0 Bypass Interlocks. AS PER WAYNE Scan Task timeout waiting for back indication	Tele On	05-Apr-2017 14:14
93	TELE	HDT	220kV CB HDT X33.0	Tele Off	05-Apr-2017 15:56
94	KARSLAKE, WAYNE	HDT	220kV CB HDT X33.0 Select Local	Check Off	05-Apr-2017 15:58
95	KARSLAKE, WAYNE	HDT	66kV CB HDT 702.0 Select Local	Check Off	05-Apr-2017 16:03
95.1	KARSLAKE, WAYNE	SWC	66kV ISOL SWC 707.4	Remove Earth	05-Apr-2017 16:03
96	KARSLAKE, WAYNE	HDT	66kV ISOL HDT 702.5	Local On & Remove DL	05-Apr-2017 16:04
97	KARSLAKE, WAYNE	HDT	66kV CB HDT 702.0 Select Remote	Check Off	05-Apr-2017 16:05

Item	Operator	Location	Component (Volt, Type, ID)	Action	System Date / Time
98	KARSLAKE, WAYNE	HDT	220kV CB HDT X33.0 Select Remote	Check Off	05-Apr-2017 16:06
99	KARSLAKE, WAYNE		Ensure no personnel in SWC switchyard	Comments	05-Apr-2017 16:07
100	KARSLAKE, WAYNE		Ensure all personnel at HDT inside relay room	Comments	05-Apr-2017 16:08
101	TELE	HDT	220kV CB HDT X33.0	Tele On	05-Apr-2017 16:14
102	TELE	HDT	66kV CB HDT 702.0 This step will energise the HDT-SWC 71 line and cable for the first time Scan Task timeout waiting for back indication	Tele On	05-Apr-2017 16:17
102.1	TELE	HDT	66kV CB HDT 702.0 Scan Task timeout waiting for back indication	Tele On	05-Apr-2017 16:37
102.2	TELE	HDT	66kV CB HDT 702.0	Tele On	05-Apr-2017 16:44
103	KARSLAKE, WAYNE		Inspect plant	Comments	05-Apr-2017 19:03
104	KARSLAKE, WAYNE		Confirm with protection techs that system is ready for synchronising and load checks	Comments	05-Apr-2017 19:03
105	HPTC	SWC	66kV CB SWC 707.0 Already off	Tele Off	
106	KARSLAKE, WAYNE	SWC	66kV CB SWC 707.0 Select Local	Check Off	05-Apr-2017 19:04
107	KARSLAKE, WAYNE	SWC	66kV ISOL SWC 707.4	Local On & Remove DL	05-Apr-2017 19:06
108	KARSLAKE, WAYNE	SWC	66kV CB SWC 707.0 Select Remote	Check Off	05-Apr-2017 19:06
109	KARSLAKE, WAYNE		Confirm all personnel inside SWC Switchroom	Comments	05-Apr-2017 19:07
110	TELE	SWC	66kV CB SWC 707.0 This step will Synchronise HDT TX 3 to the grid for the first time	Tele On	05-Apr-2017 19:12
111	KARSLAKE, WAYNE		Protection techs to complete load tests	Comments	05-Apr-2017 19:28
112	TELE	HDT	66kV CB HDT 702.0	Tele Off	05-Apr-2017 19:32
113	KARSLAKE, WAYNE	HDT	66kV CB HDT 702.0 Select Local	Check Off	05-Apr-2017 19:36
114	KARSLAKE, WAYNE	HDT	66kV ISOL HDT 702.5	Local Off	05-Apr-2017 19:37
115	KARSLAKE, WAYNE	HDT	66kV ISOL HDT 702.5	Local On	05-Apr-2017 19:37
116	KARSLAKE, WAYNE	HDT	66kV CB HDT 702.0 Select Remote	Check Off	05-Apr-2017 19:38
117	TELE	HDT	66kV CB HDT 702.0	Tele On	05-Apr-2017 19:43
118	TELE	HDT	220kV CB HDT X33.0	Tele Off	05-Apr-2017 19:44
119	TELE	HDT	220kV CB HDT X33.0	Tele On	05-Apr-2017 19:45
120			Confirm protection schemes configured for final restoration	Comments	

Item	Operator	Location	Component (Volt, Type, ID)	Action	System Date / Time
121				Cancel STT No# - Advise HPDC	
122	KARSLAKE, WAYNE	HDT	220kV CB HDT X51.0 Check Local	Check Off	05-Apr-2017 19:48
123	KARSLAKE, WAYNE	HDT	220kV ISOL HDT X51.3 Enable closing supply and select remote	Check Off & Remove DL	05-Apr-2017 19:49
124	TELE	HDT	220kV ISOL HDT X51.3	Tele On	05-Apr-2017 19:49
125	KARSLAKE, WAYNE	HDT	220kV ISOL HDT X51.3	Check On	05-Apr-2017 19:50
126	KARSLAKE, WAYNE	HDT	220kV CB HDT X51.0 Select Remote	Check Off	05-Apr-2017 19:51
127	TELE	HDT	220kV CB HDT X51.0	Tele On	05-Apr-2017 19:51
128				Advise HPTC Schedule Complete	
128.1	TELE	HDT	TX3 TAP POSITION Auto Manual	Tele Set Manual	05-Apr-2017 16:16
128.2	TELE	HDT	TX3 TAP POSITION	Tele Lower	05-Apr-2017 16:34
128.3	TELE	HDT	TX3 TAP POSITION	Tele Lower	05-Apr-2017 16:35